unidrain®

HIGHLINE CUSTOM

DK | MONTERINGSVEJLEDNING
UK | CONSTRUCTION GUIDE
DE | EINBAULEITUNG
SE | MONTERINGSANVISNING
FI | RAKENNUSOHJEET
UK | CONSTRUCTION GUIDE
NO | BYGGEVEILEDNING

HighLine | Anvisning **med** ramme | Instruction **with** frame | Anleitung **mit** rahmen

1

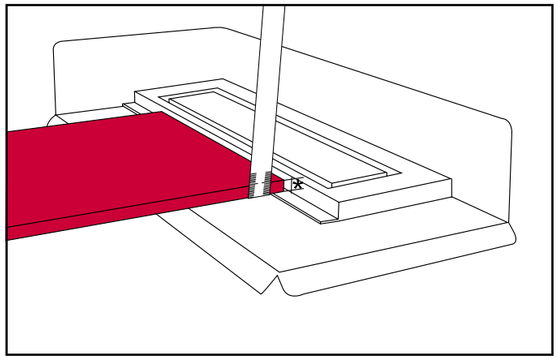

2

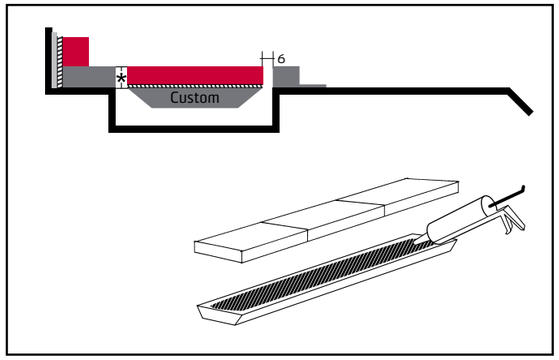

3

*	10 mm	12 mm	15 mm	25 mm	
					1 mm - for adjustment
		x			2 mm
			x		5 mm
				x	15 mm
	x				5 mm
					6 mm - for adjustment
		x			8 mm
			x		10 mm
				x	20 mm

4

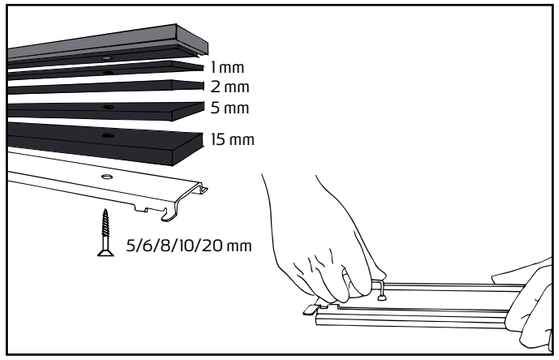

5

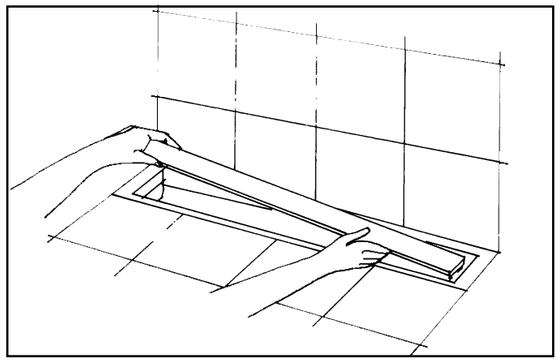

A

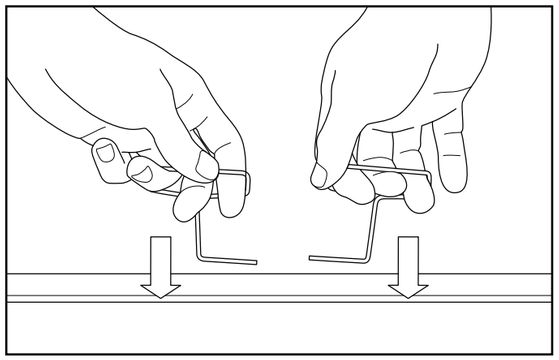

B

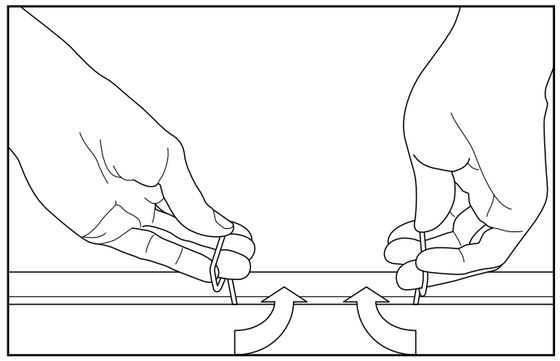

C

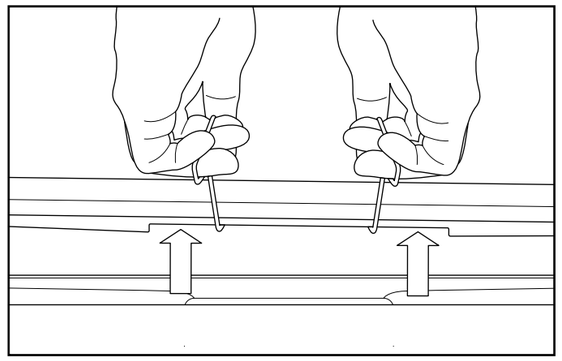

Tværsnit | Cross Section | Querschnitt

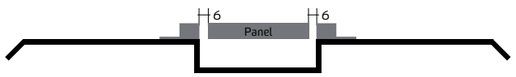

3000

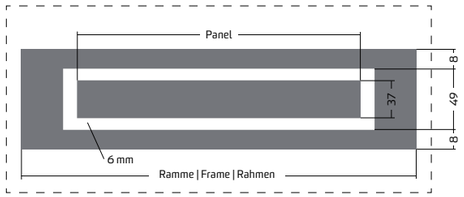

Model	X	Panel | Cassette | Custom
300	265 mm	253 mm
700	645 mm	633 mm
800	745 mm	733 mm
900	845 mm	833 mm
1000	945 mm	933 mm
1200	1145 mm	1133 mm

Tværsnit | Cross Section | Querschnitt

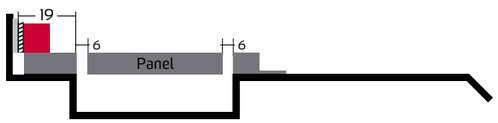

1001 | 1002 | 1003

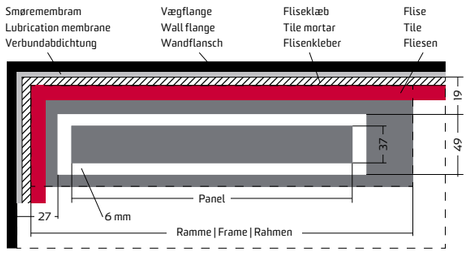

1004

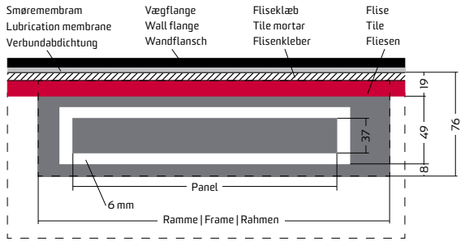

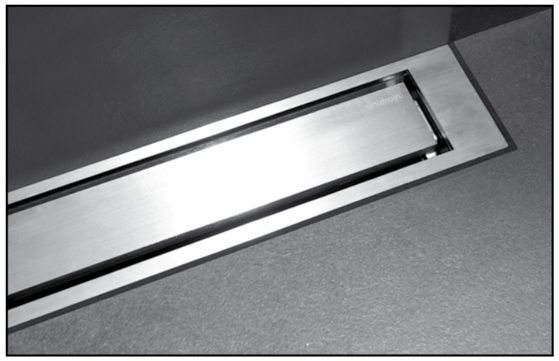

HighLine | Anvisning **uden** ramme | Instruction **without** frame | Anleitung **ohne** rahmen

1

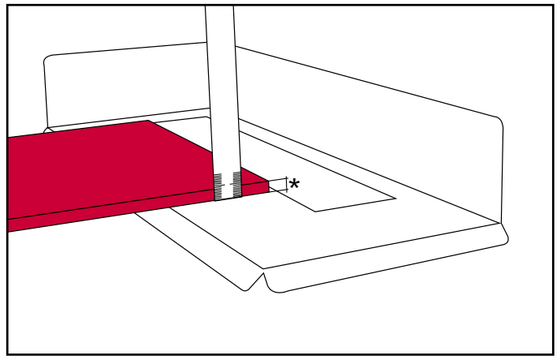

2

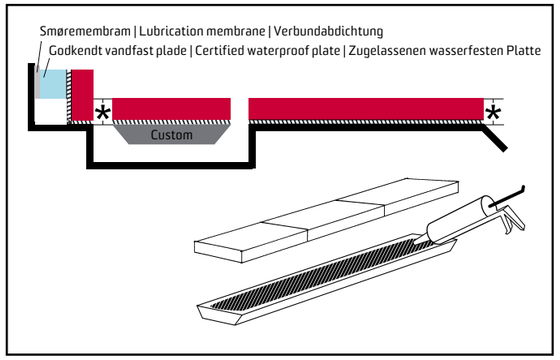

3

*	10 mm	12 mm	15 mm	25 mm	
					1 mm - for adjustment
		x			2 mm
			x		5 mm
				x	15 mm
	x				5 mm
					6 mm - for adjustment
		x			8 mm
			x		10 mm
				x	20 mm

4

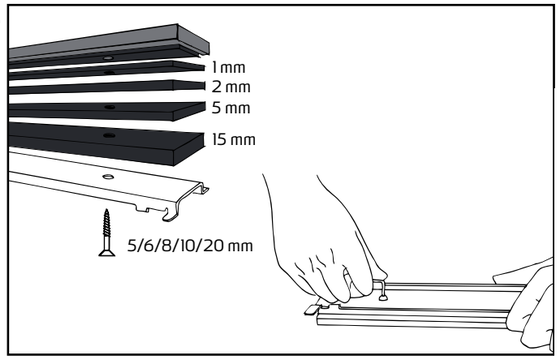

5

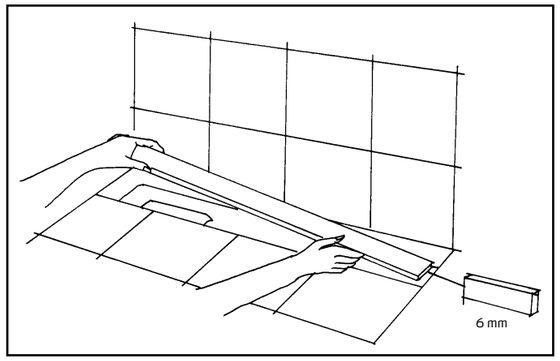

A

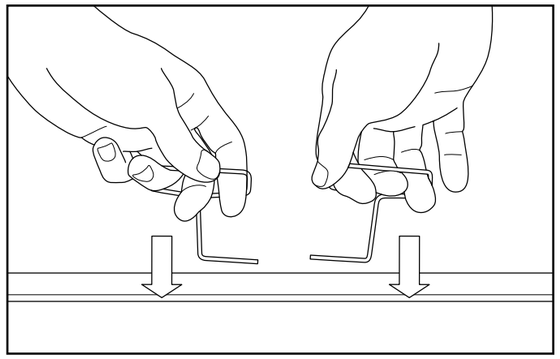

B

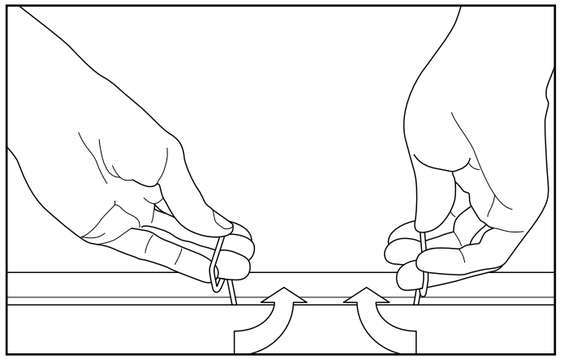

C

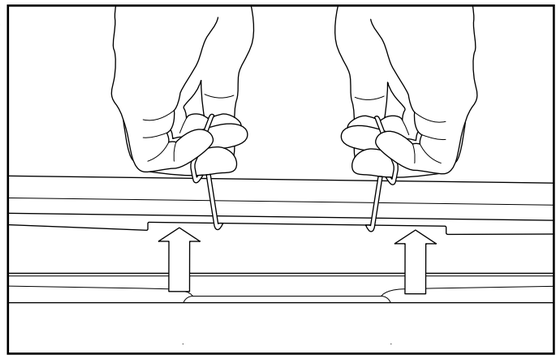

Tværsnit | Cross Section | Querschnitt

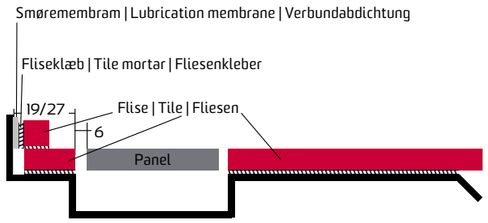

1001 | 1002 | 1003

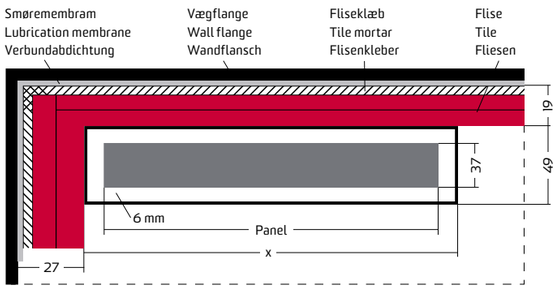

1004

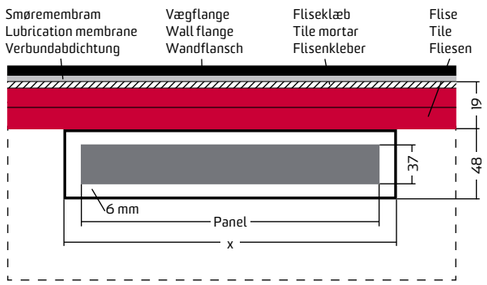

3000

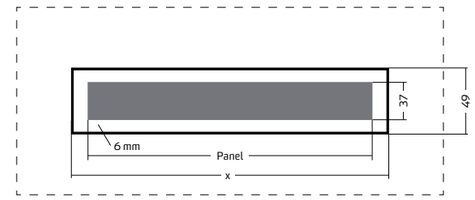

Tværsnit | Cross Section | Querschnitt

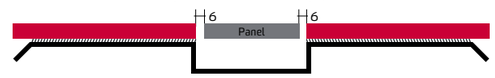

Model	X	Panel | Cassette | Custom
300	265 mm	253 mm
700	645 mm	633 mm
800	745 mm	733 mm
900	845 mm	833 mm
1000	945 mm	933 mm
1200	1145 mm	1133 mm

Tværsnit | Cross Section | Querschnitt

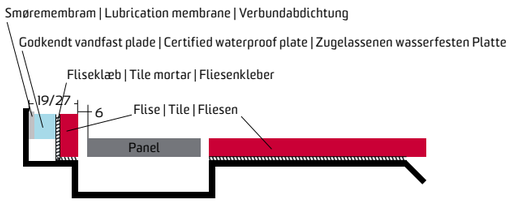

1001 | 1002 | 1003

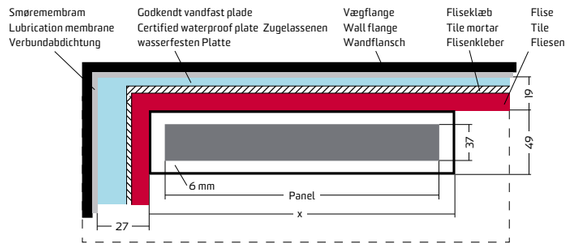
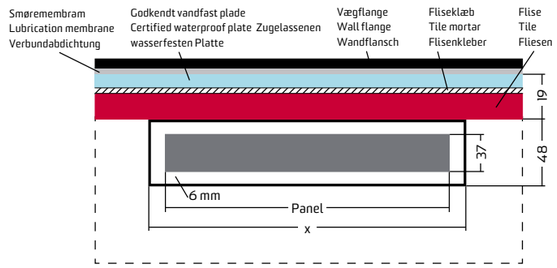
1004