Bristol Pod

Sectional enclosure

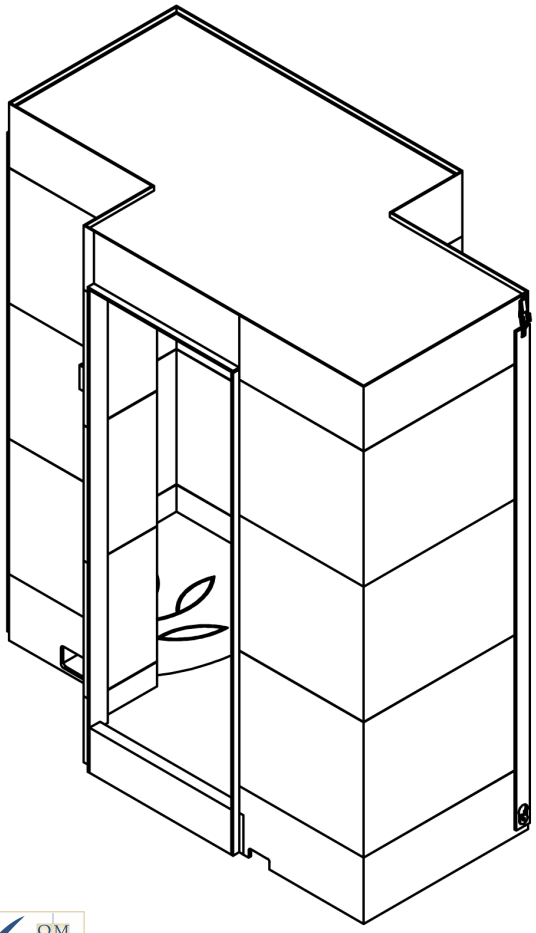

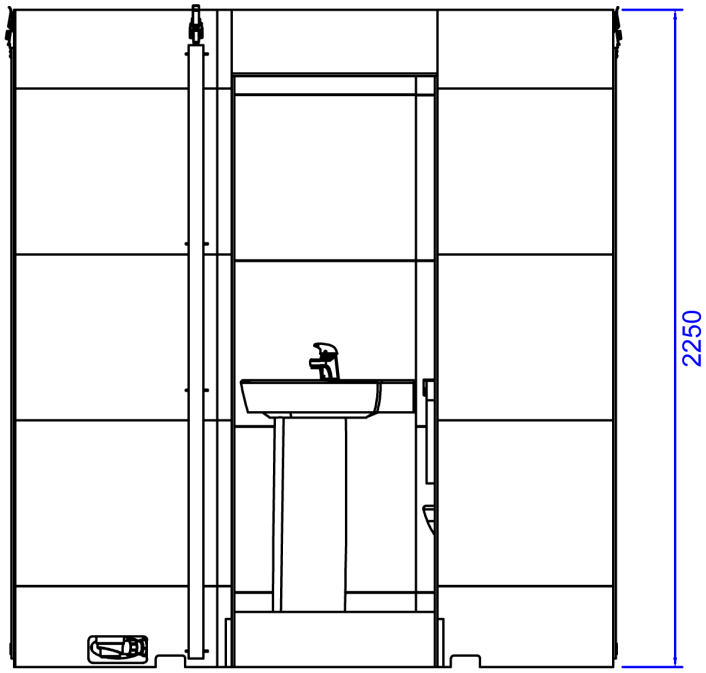

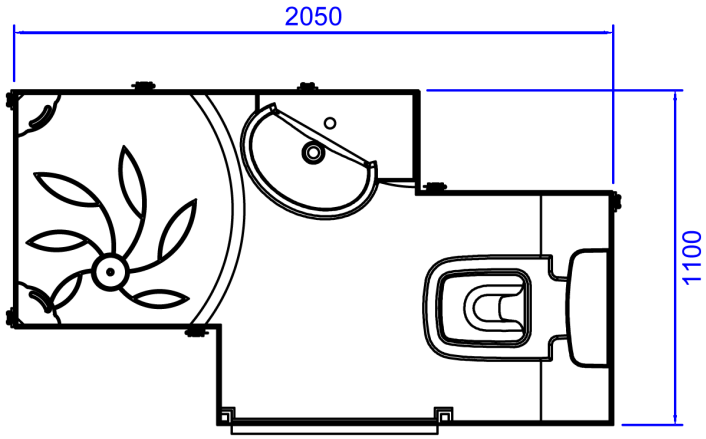

MATERIAL
Polypropylene

WEIGHT
210KG

COLOUR
White, Fleck Grey, Champagne

DIMENSIONS (mm)
2050(w) x 1100(d) x 2250(h)

25 YEAR GUARANTEE

PATENT NO. Available on request

AutoCAD

Taplanes Limited
Station Court
Nidd
Harrogate
North Yorkshire
HG3 3BN

Enquiries
Telephone 01423 771 645
Fax 01423 771 916
Email admin@taplanes.co.uk
www.taplanes.co.uk

TAPLANES®
SHOWERING SOLUTIONS