SHG Vertical Support Rail

RS-F50

Ver 1 - 24-09-2012

These details are for general detailing purposes only and are not to be relied upon for design and installation criteria. Please contact our technical support for more precise information.

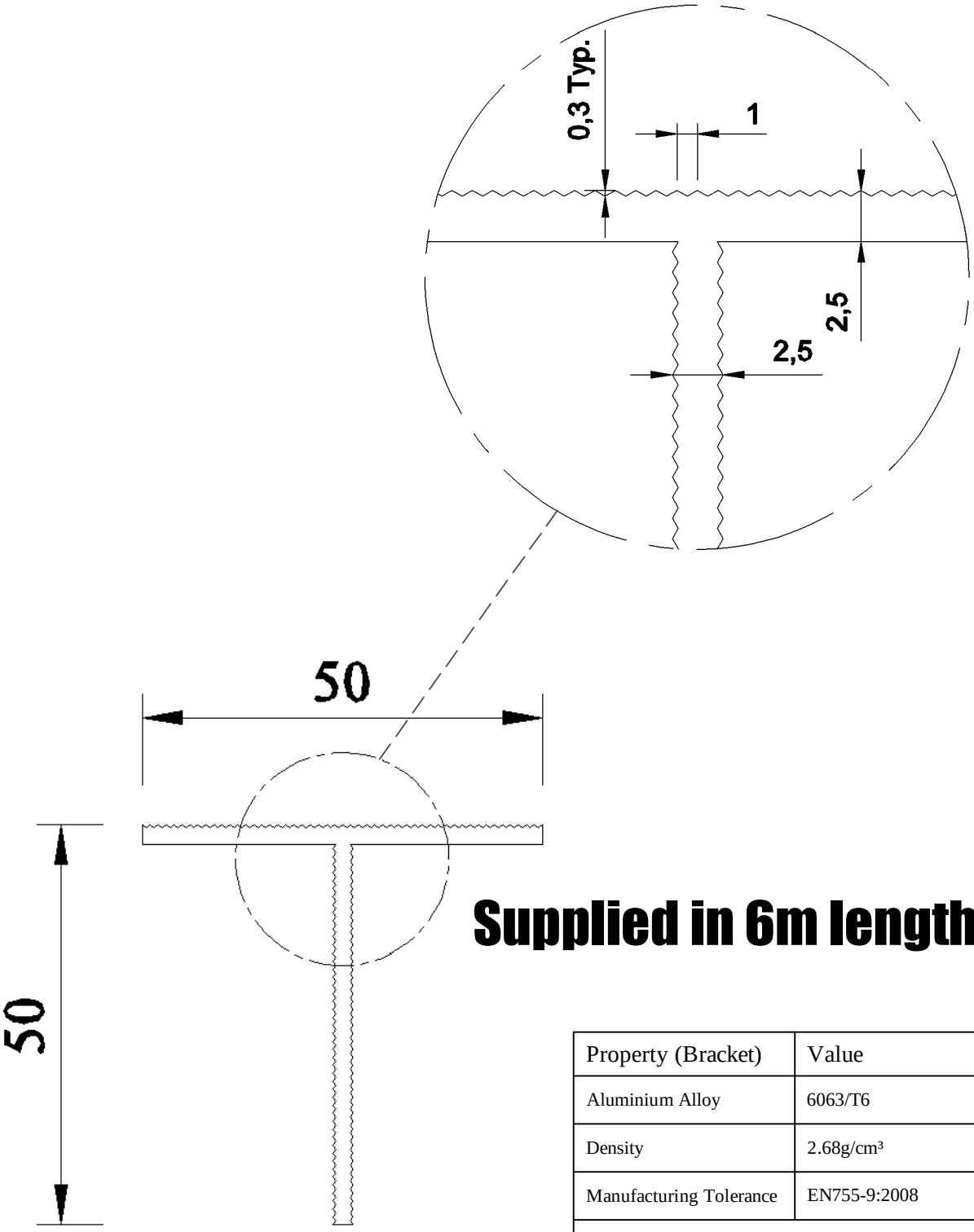

Supplied in 6m lengths

Property (Bracket)	Value
Aluminium Alloy	6063/T6
Density	2.68g/cm³
Manufacturing Tolerance	EN755-9:2008
Structural property data available on request	

Members of:

CENTRE FOR WINDOW AND CLADDING TECHNOLOGY

Shackerley

Shackerley (Holdings) Group Ltd
139 Wigan Road
Euxton
Chorley
PR7 6JH
Tel: +44 (0)1257 273114
Fax: +44 (0)1257 262386
E-mail: info@shackerley.com

Any advice, opinion or information shown on this drawing is given in order to assist in the use of the company's products. The user must ensure suitability of all details for the application intended. In particular the company will not accept any liability for loss or damage which may arise from errors/omissions or the incorrect use of its products. The company operates a continuous research and development programme and reserves the right to update information at any time without notice. All dimensions and details must be checked on site by the user prior to fabrication, erection and installation.