# Speed Gates

# LOOP LS 140

An elegant designed, swing speed gate with 24V BLDC motor. Opening and closing time between 0,8 - 1.5 sec.

# Speed Gates

# LOOP LS 140

## FEATURES

- Swing gate with fast-opening hidden barrier wings made of 8 mm tempered glass.
- Galvanized coated steel frame and stainless steel housing panels.
- 10 mm tempered glass top lid.
- Illuminated indication pictograms.
- BLDC motor driven.

## FUNCTIONS & INTERFACE

- Logic controlled interface, bi-directional operation
- Entrance and exit directions can be individually set as controlled, locked or free before or after the installation.
- In controlled access mode, after release confirmation which was sent by access control system, the gate opens the barrier wings and enables one person access in the direction of travel. After each person, the barrier wings blocks passage again and does not permit access from both entrance and exit directions until receiving a new release signal from the access control system.
- After the release, the gate closes the barrier wings after an adjusted time if no transition or passage occures.
- If people from both directions would like to pass through simultaneously, the first person who activates the gate takes precedense.
- **Multiple opening:** An additional person is able to to release the next passage cycle during an ongoing passage cycle in both directions. The gate controller stores up to 255 releases and lets corresponding number of individuals pass through.
- Relay outputs for counting passage in either direction
- RS 232 / RS 485 serial port
- Control for inputs and outputs via potential-free contact

## EMERGENCY & POWER CUT

In the event of an emergency, the gate opens the barrier wings (fail-safe). During power-cut, the mechanism and barrier wings become unlocked and move freely in both directors. The gate reset itself automatically when the emergency alarm stops or the power is switched back on.

## LED INDICATORS

LED lights indicates the operating status of the turnstile in both directions.
**Blue** - Waiting mode
**Green** - Passage confirmed
**Red** - No passage

## ACCESS CONTROL INTEGRATION

- Loop LS 140 / LS 140H can be controlled by any kind of access control system through dry contact or COM ports.
- Card reader area under the glass lid.
- Optional cuts on glass top is available for surface mount readers, reader holders or stands as well as standard or custom designed posts for access controller integration.
- RFID Icon positioned in the middle of reader installation area to indicate the card reader position clearly.
- An additional indicator on top illuminates in red when the gate is locked and changes to green for confirmed passages or during free passage.

## SETTINGS

| | |
|---|---|
| **Operation mode for each directions** | **:** Controlled / Free / Locked |
| **Acoustic Notifications** | **:** On/Off |
| **Release time out** | **:** 5-10-15-20 secs |
| **Emergency connection** | **:** On/Off |

**Security Level Setting**

1. Acoustic alarm only without blocking the lane
2. Wings close immediately and block the lane* without an acoustic alarm
3. Wings close immediately and block the lane* + acoustic alarm sounds

* If the lane is blocked during the wrong way and tailgating attempt, there is a danger of the wings hitting the unauthorized person.

## SPECIFICATIONS

**Construction:** Steel
**Passage width:** 650 mm (LS 140) / 915 mm (LS 140H)
**Cabinet size (W x L x h):** 171 x 1336 x 1018 mm
**Weight:** 105 Kg
**Power Supply:** 100 - 240 VAC, 50/60 Hz
**Logic Voltage:** 24V DC
**Operation Temperature:** -0° / +70°
**IP Protection:** Cabinet IP44
**MCBF:** 10.000.000

## OPTIONS, CUSTOMIZATION & ACCESSORIES

- Acrylic or polycarbonate barrier wings.
- Logo on barrier wings.
- Powder coated housing panels in RAL color.
- Stainless steel base plate.
- Access controller integration brackets on demand.

# Speed Gates

# LOOP LS 140

## SPECIFICATIONS

**Dimentions**

| | |
|---|---|
| Passage width: | 650 - 915 mm |
| Gate leaf height: | 950 - 1200 - 1800 mm |
| Leaf ground clearence: | 190 mm |
| Housing/Cabinet width: | 171 mm (without mechanism) |
| Housing/Cabinet length: | 1336 mm |
| Housing /Cabinet height: | 1018 mm |

**Construction & Finish**

| | |
|---|---|
| Frame: | Galvanized coated steel |
| Side panels: | Stainless steel / Powder coated steel |
| Top cover: | 10 mm glass |
| Gate Barrier Leaf: | 8 / 10 mm tempered glass / polycarbonate / acrylic |
| Side Panels: | 10 mm tempered glass |

**Electromechanics**

| | |
|---|---|
| Electric Supply: | 230 VAC, 50/60 Hz |
| Power Supply Unit: | 24V |
| Drive Mechanism: | BLDC motor & gearbox |
| Opening/Closing Time: | 0.8 - 1.5 sec (depends on leaf size) |
| Sensors: | 24-72 sensors |
| MCBF: | 10.000.000 |
| IP: | IP54 |
| Communication: | RS485, RS232, Modbus, TCP/IP |

# Speed Gates

## LOOP LS 140

### Barrier wing height

950 mm

1200 mm

1800 mm

# Speed Gates

# LOOP LS 140

## Dimensions (Inch)

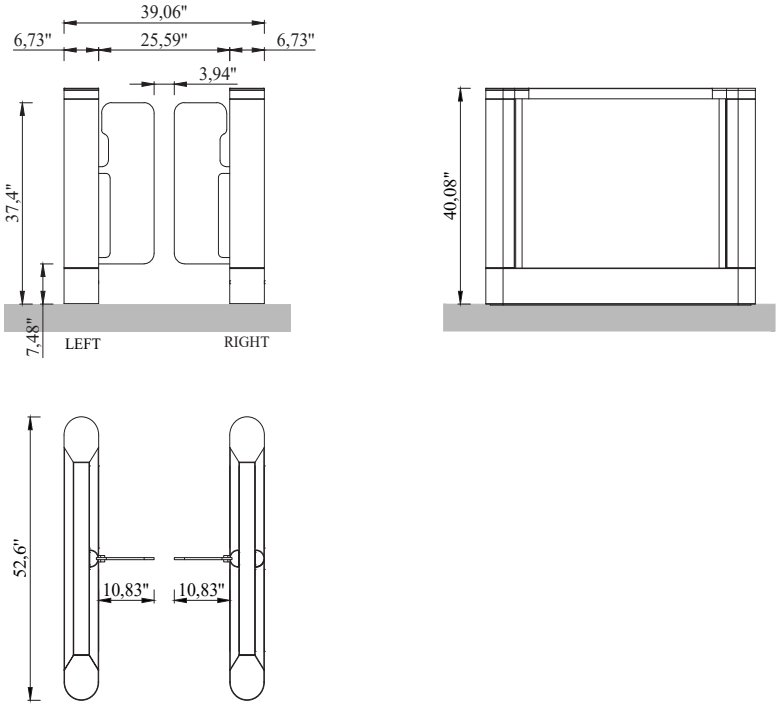


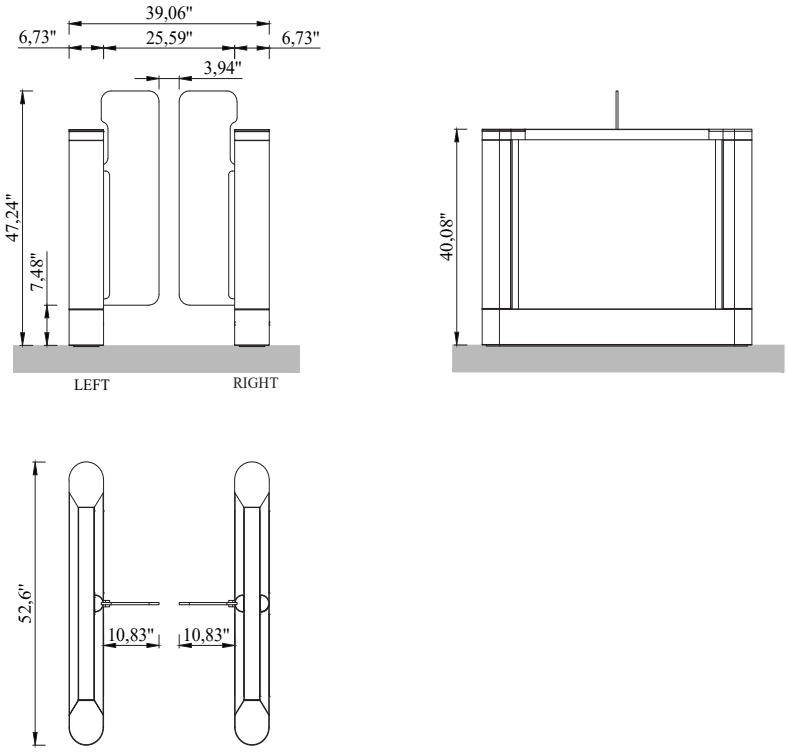

# Speed Gates

# LOOP LS 140

## Dimensions (mm)

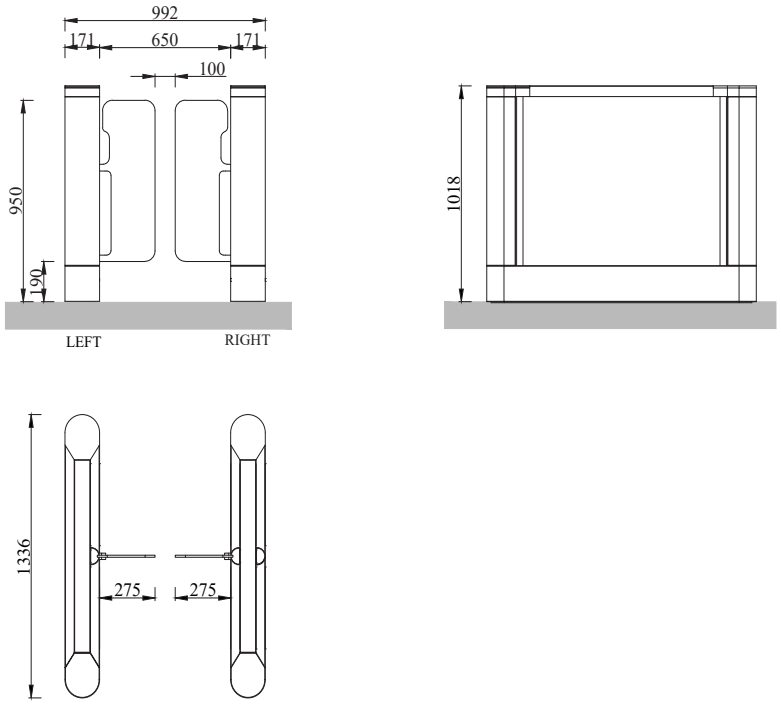


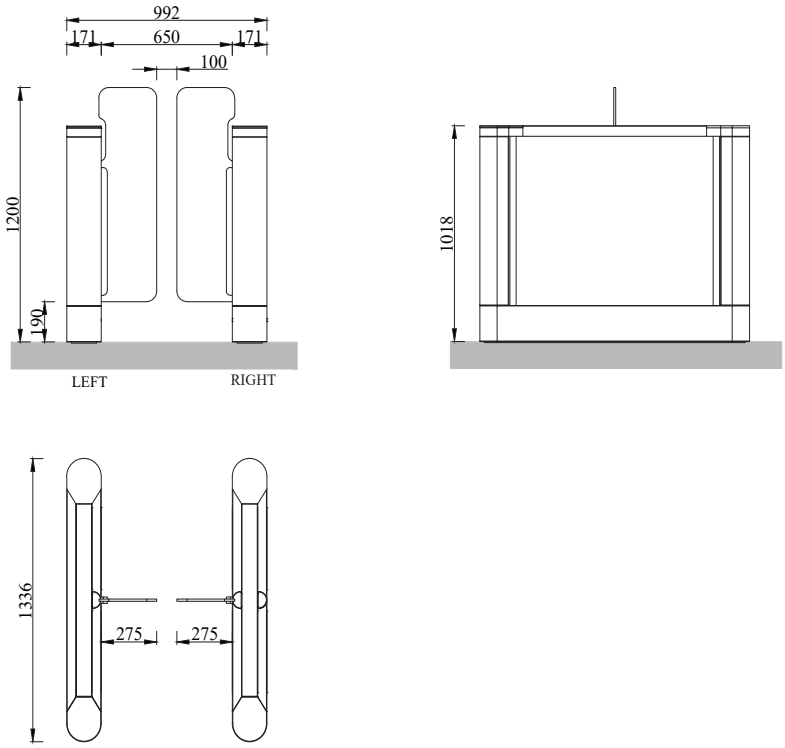

# Speed Gates

# LOOP LS 140

## Dimensions (Inch)

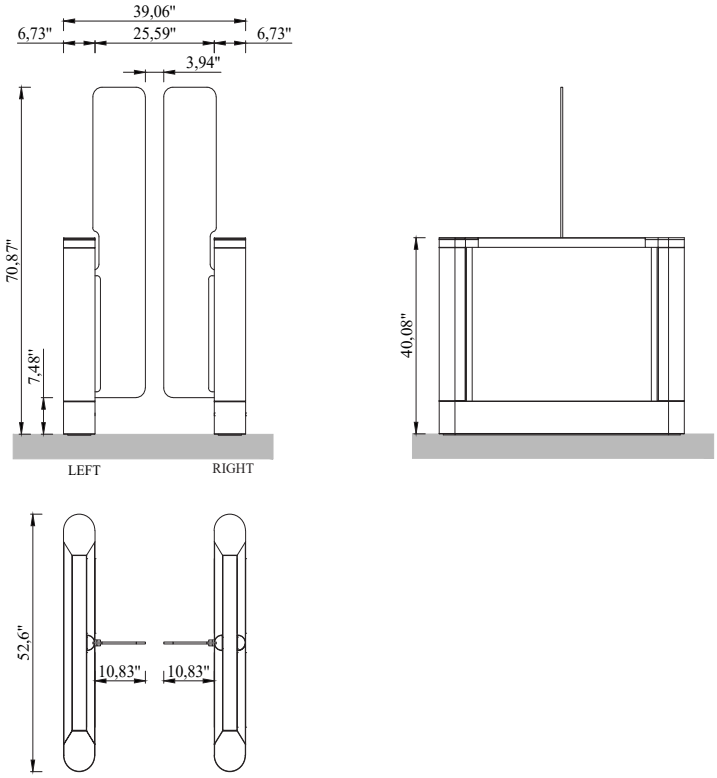


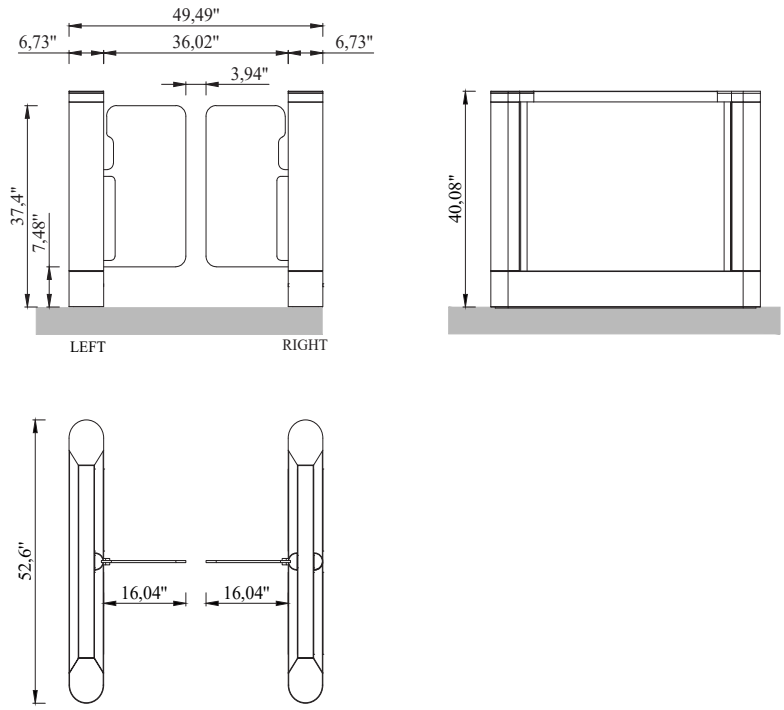

# Speed Gates

# LOOP LS 140

## Dimensions (mm)

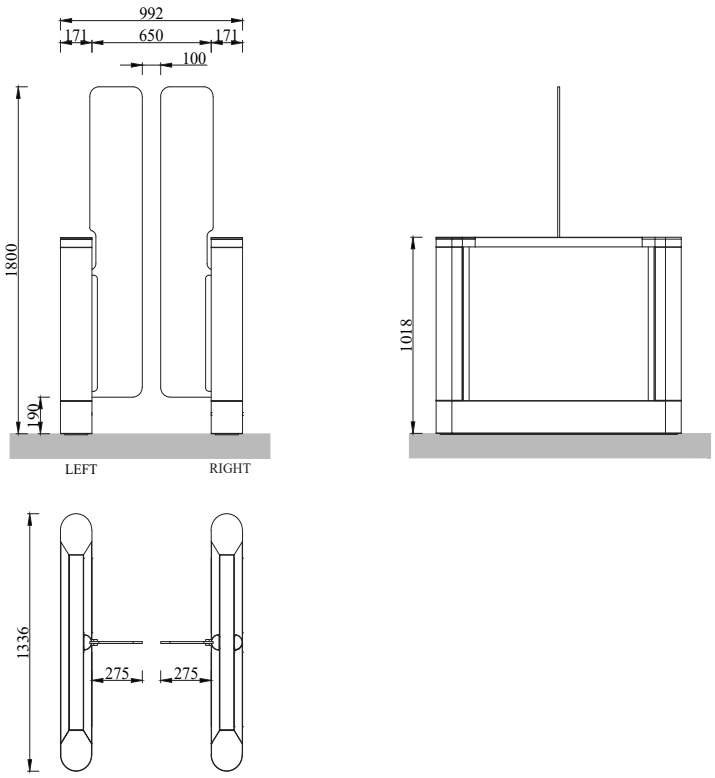


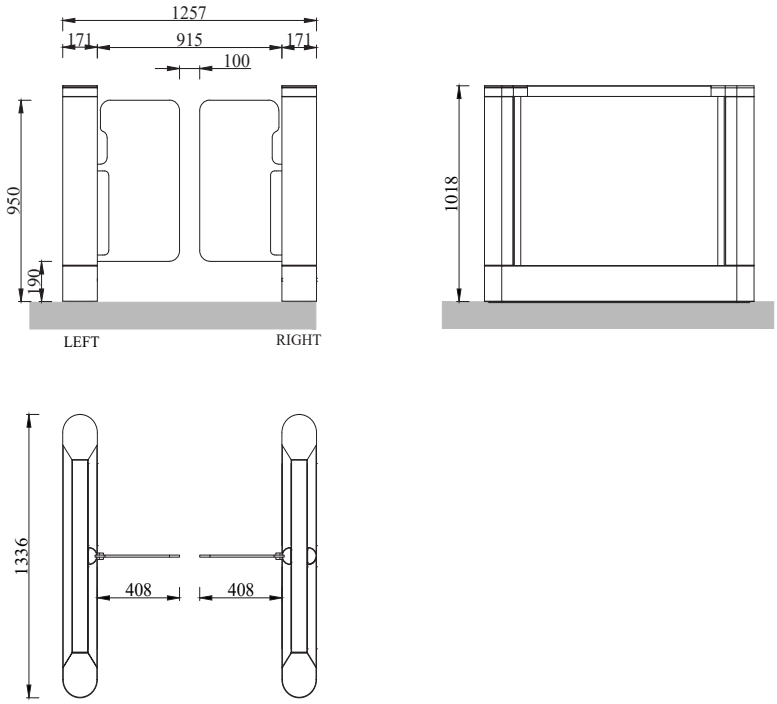

# Speed Gates

# LOOP LS 140

## Dimensions (Inch)

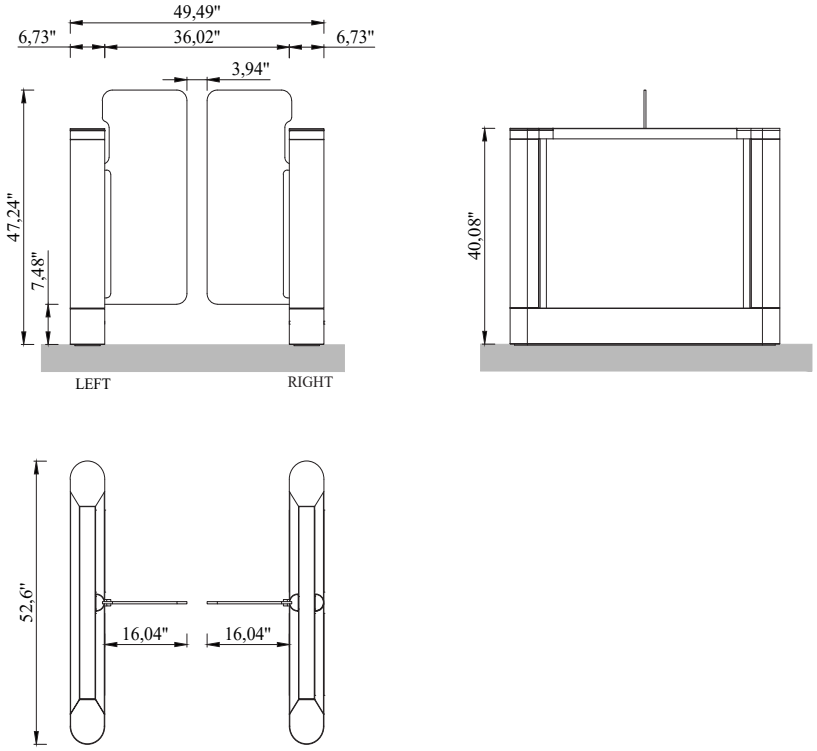


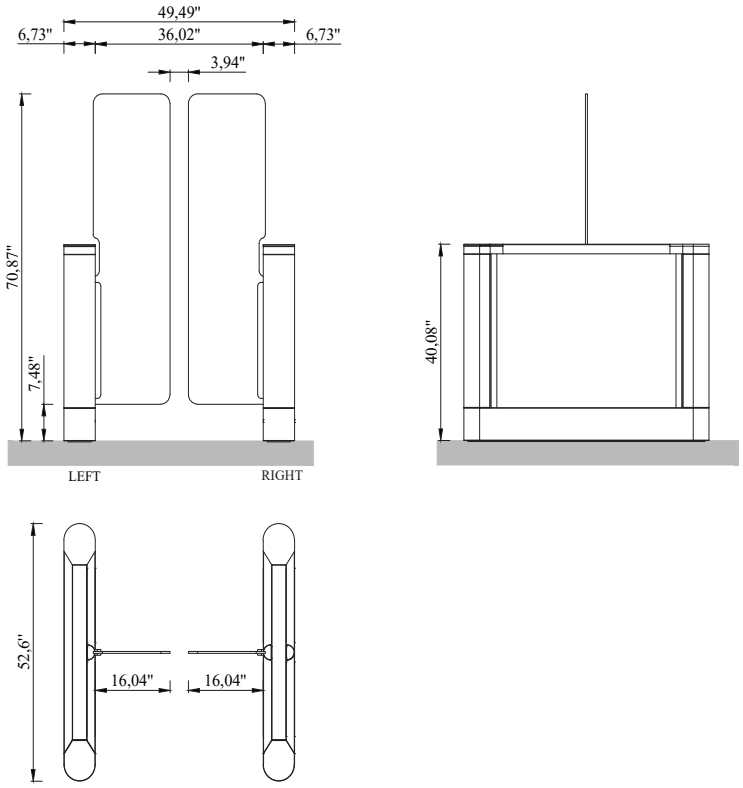

# Speed Gates

# LOOP LS 140

## Dimensions (mm)

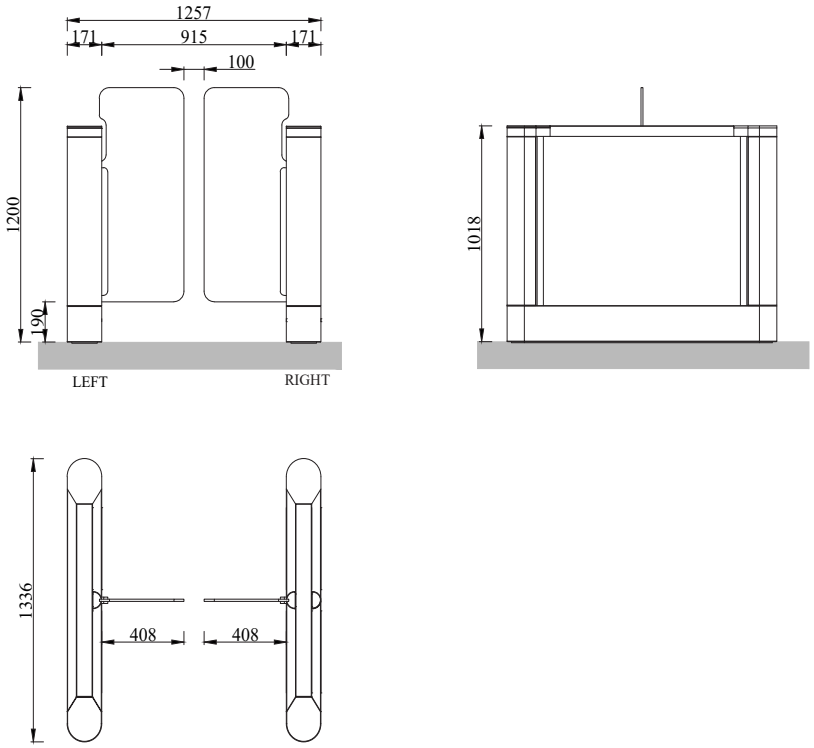


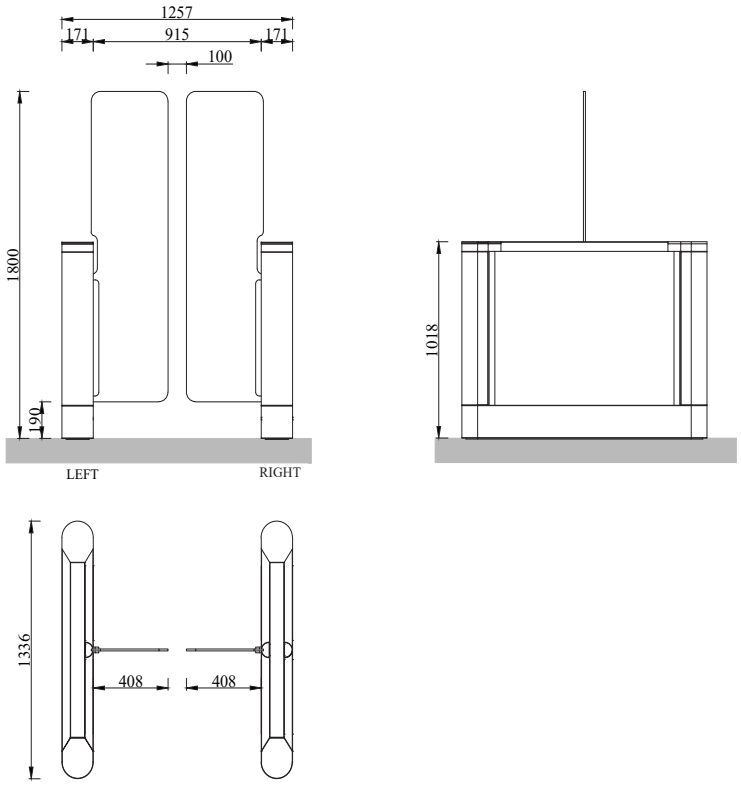

# Speed Gates

# LOOP LS 140

## Dimensions (Inch)

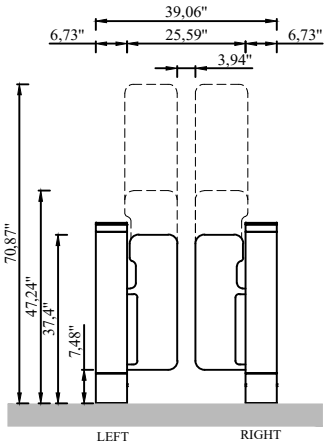


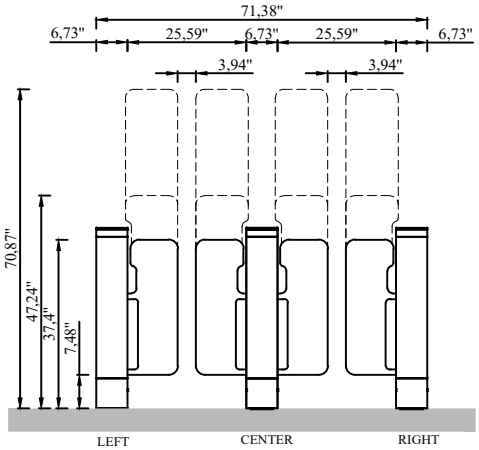


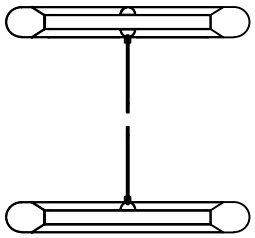

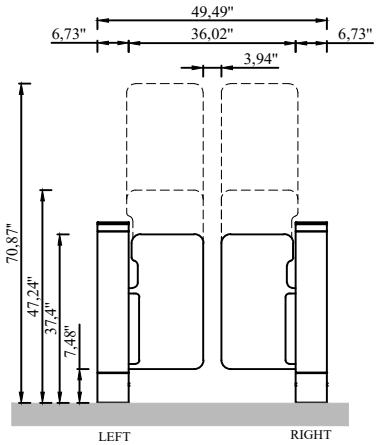


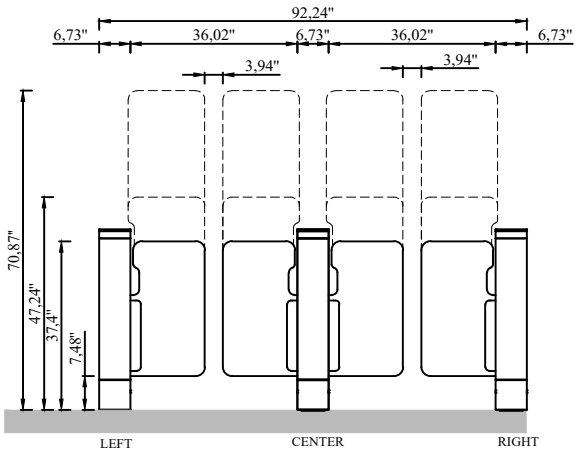


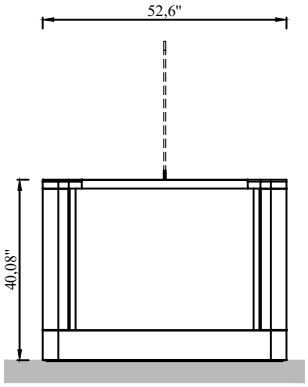


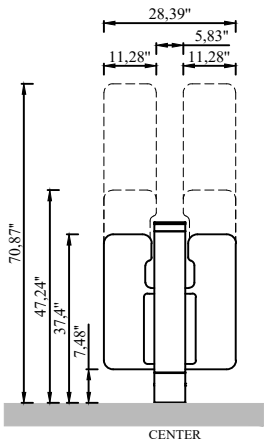


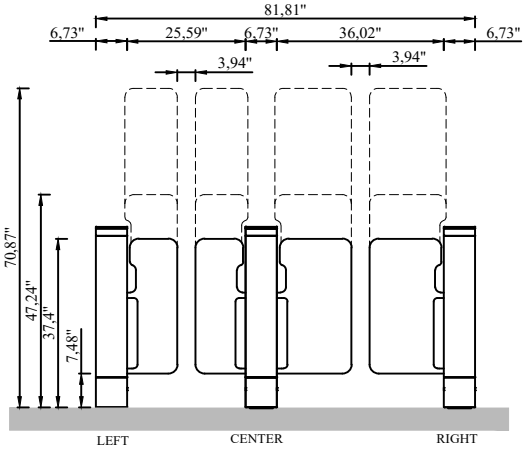


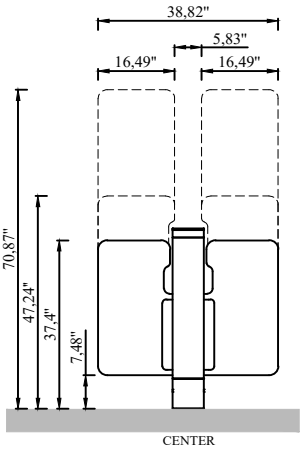

# Speed Gates

# LOOP LS 140
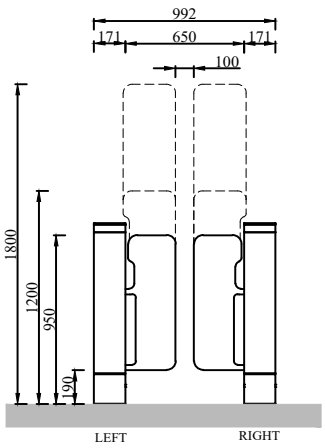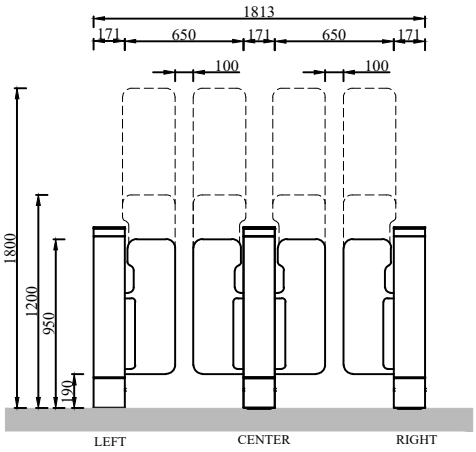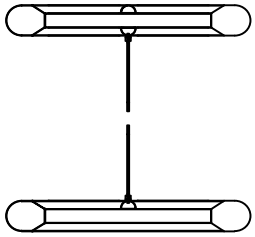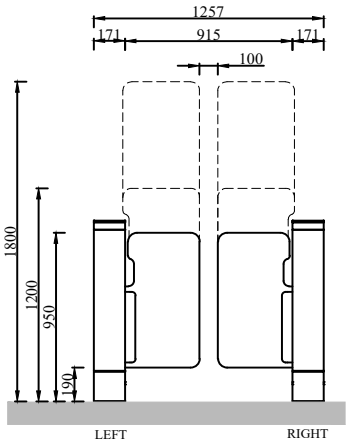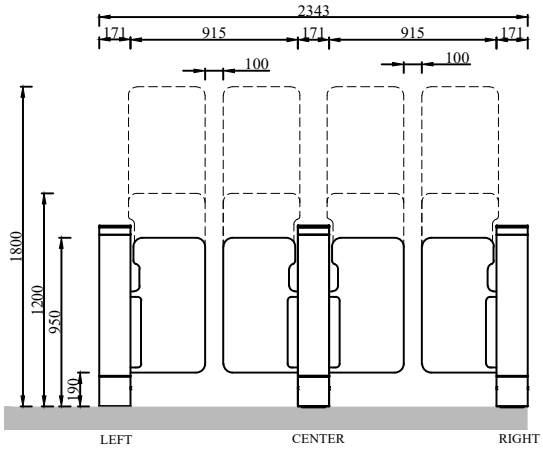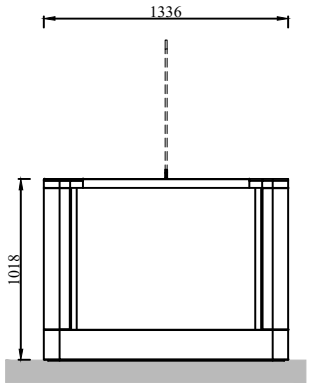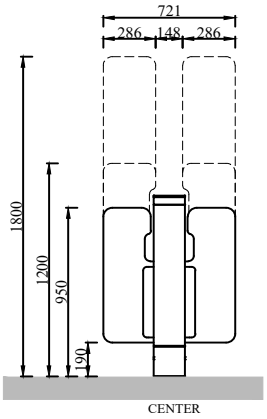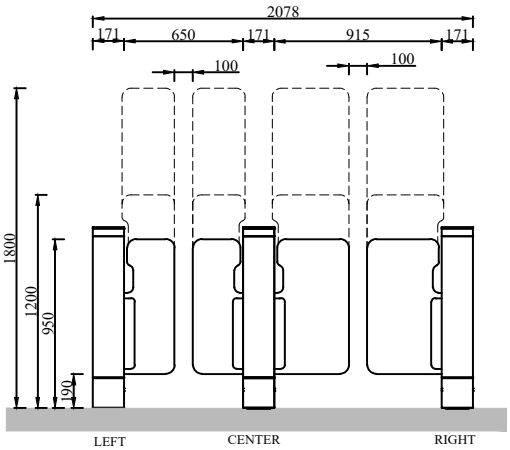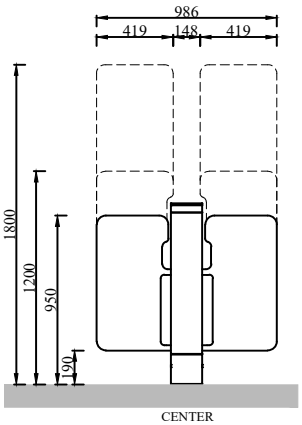
## Dimensions (mm)