This document must not be copied without our written permission, and the contents thereof must not be imported to a third party nor be used for any unauthorized purpose. Contravention will be prosecuted. Purus AB

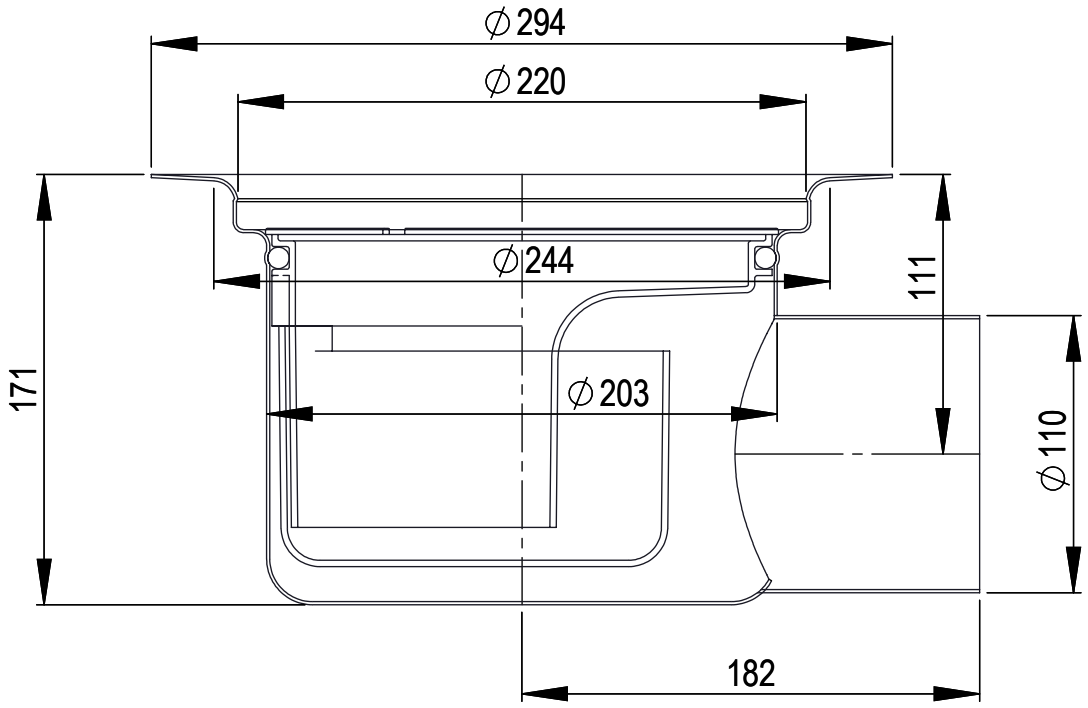

RSK 710 28 35

Annotation	A4	This drawing replace	Replaced by	Date

PURUS	E	Scale 1:3	Page 1(1)	General tolerance. ISO 2768-1	Weight (gram)	Volume (cm3)	Approved by / Date
	Material				Surface treatment	Designer SwS	Created date 2014-06-12
	Name Måttskiss, 7102835, Bigg 110 R					Article no	Edition

Purus AB Södra Dragongatan 15
SE-271 39 YSTAD, SWEDEN
Ph. +46 104144900 Fax +46 104144996
www.purus.se

Denna handling får ej utan vårt medgivande kopieras.
Den får ej heller delgivas annan eller eljest obehörigen användas.
Överträdelse härav beivras med stöd av gällande lag. Purus AB