orlight®
FROM SOURCE TO SITE

ORL1445 - Large Picture Frame Feature Light

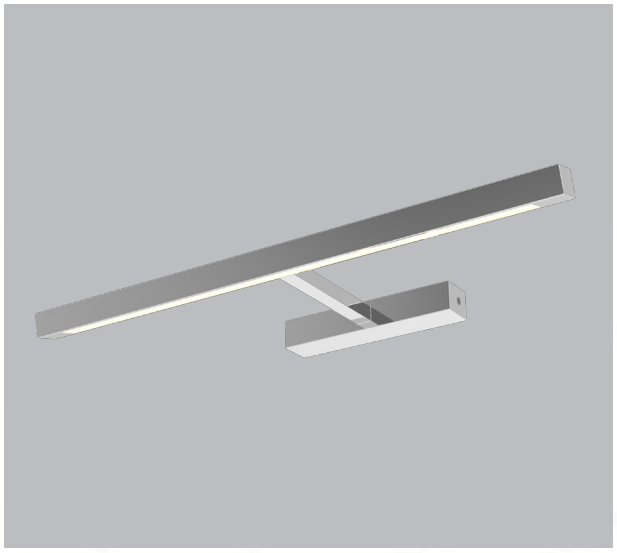

Description

Designer picture light featuring attractive polished chrome or antique bronze finish. Adjustable head allows for easy direction of light. Integrated LED chipset and power supply unit for simple low energy lighting solution. Asymmetric light emission with wide distribution angle facilitates good illumination of artwork.

Fixing Details

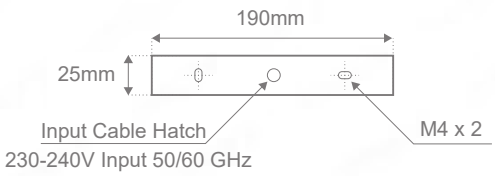

Standards

6W 240V IP20 LED CRI>80 RoHS CE

Dimensions

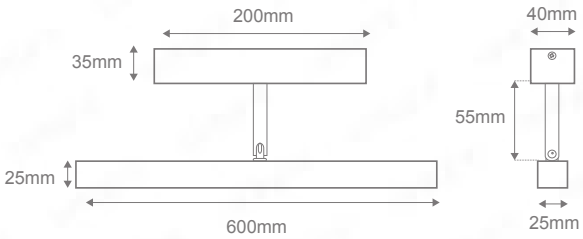

Specifications

Chipset	LG
Dimming Options	Switched Integral Driver
Power Consumption	6W
Voltage	240V
Colour Temperature	3000K
Light Output ~	400lm
lm Per Watt ~	67lm/W
CRI	>80
Binning	2 Step MacAdams Ellipse
IP Rating	20
Weight	1.4 Kg
Finish	Polished Chrome / Antique Bronze
Installation Information	Surface Mounted

Finishes

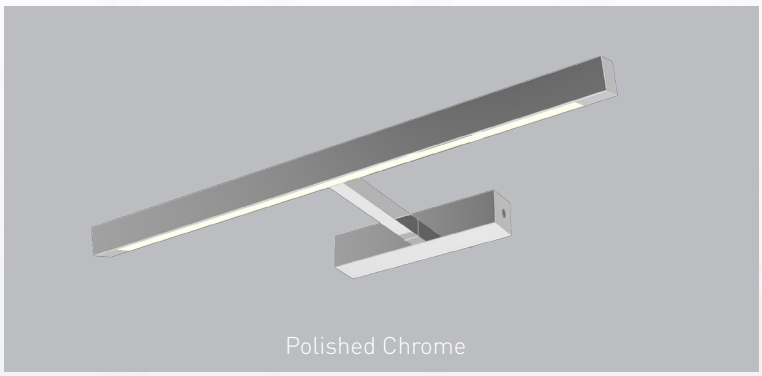

Polished Chrome

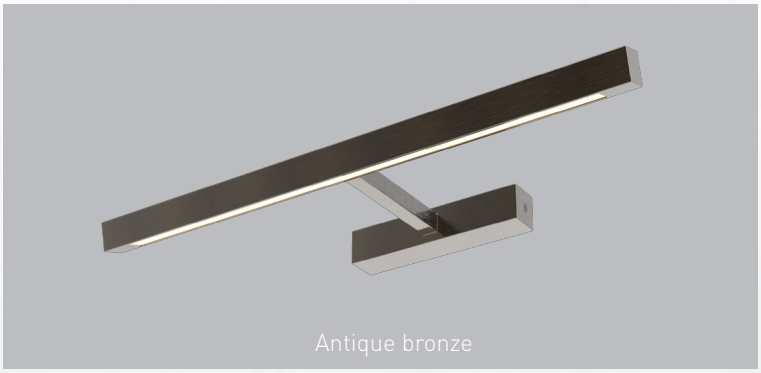

Antique bronze

Product Coding: Example: ORL1445-BR-3000K

CODE	FINISH	COLOUR TEMP
ORL1445	STANDARD FINISH POLISHED CHROME	3000K
	BR - (ANTIQUE BRONZE)	