TECHNICAL DATA SHEET

ROXOR

Sales Code: PCB001

Description: Pilot Corner Bath Pack Lh

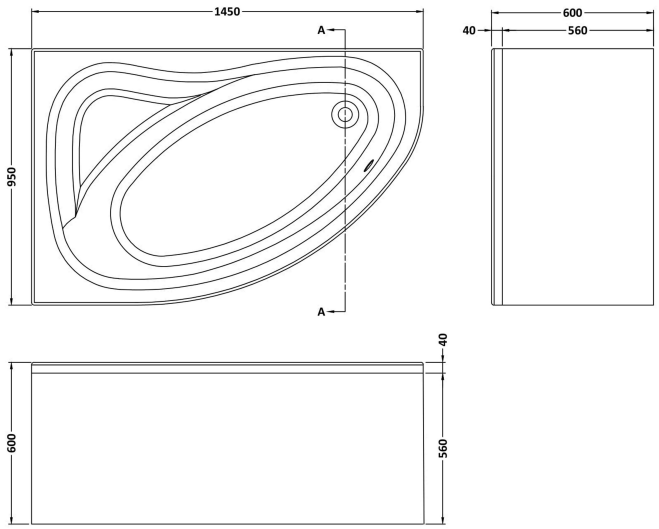

Packaging Details

Barcode: 5055275896969

Sales Code: NCB021NL

Description: Pilot Corner Bath 1450X950 Lh

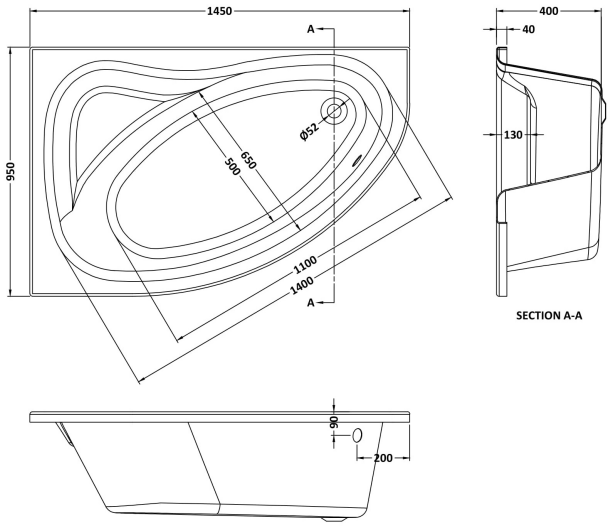

Product Dimensions	
Length (mm):	1495
Width (mm):	950
Depth (mm):	400
Nett Weight (kg):	19.2
Packaging Dimensions	
Length (mm):	1500
Width (mm):	955
Depth (mm):	415
Gross Weight (kg):	19.2
Packaging Data	
Box Colour:	Brown Cardboard Sleeve
Box Qty:	1
Label Size:	192 x 38
Label Colour:	White Label
Label Qty:	1
Outer Box Dimensions (If Applicable)	
Length (mm):	
Width (mm):	
Height (mm):	
Gross Weight (kg):	
Barcode:	5055275833285
Product Details	
Country of Origin:	Poland
Fitting Instruction:	No
Certification:	FSC: No CE: Yes
Material Colour Reference:	European White
Product Material:	Acrylic
Material Thickness:	4mm
Volume (Ltr):	160L
Displaced Capacity:	90L
Leg Set Included:	Legset Not Included
Waste Included:	Waste Not Included
Drilled/Undrilled:	Undrilled For Taps
Includes Grips:	No Grips Supplied
Embossed:	No
No of Tapholes:	None
Anti-Slip:	No

Sales Code: NCB020A

Description: Pilot Corner Bath Panel

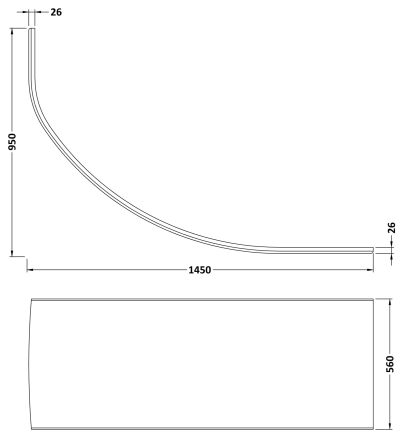

Product Dimensions	
Length (mm):	1840
Width (mm):	25
Depth (mm):	560
Nett Weight (kg):	3.2
Packaging Dimensions	
Length (mm):	1840
Width (mm):	440
Depth (mm):	560
Gross Weight (kg):	3.2
Packaging Data	
Box Colour:	Polybagged With End Caps
Box Qty:	1
Label Size:	192 x 38
Label Colour:	White Label
Label Qty:	1
Outer Box Dimensions (If Applicable)	
Length (mm):	
Width (mm):	
Height (mm):	
Gross Weight (kg):	
Barcode:	5055275833940
Product Details	
Country of Origin:	Poland
Fitting Instruction:	No
Certification:	FSC: N/A CE: N/A
Material Colour Reference:	European White
Product Material:	Acrylic
Material Thickness:	2mm
Volume (Ltr):	N/A
Displaced Capacity:	N/A
Leg Set Included:	Not Applicable
Waste Included:	Not Applicable
Drilled/Undrilled:	Not Applicable
Includes Grips:	Not Applicable
Embossed:	Not Applicable
No of Tapholes:	None
Anti-Slip:	Not Applicable

Sales Code: NBL002

Description: Large Bath Leg Set

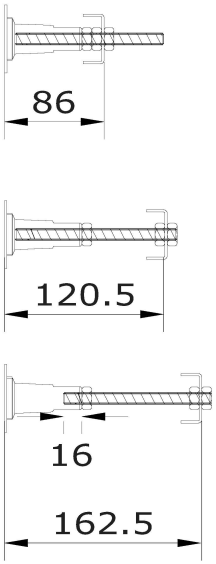

Product Dimensions	
Length (mm):	
Width (mm):	
Depth (mm):	
Nett Weight (kg):	2.3
Packaging Dimensions	
Length (mm):	630
Width (mm):	100
Depth (mm):	60
Gross Weight (kg):	2.3
Packaging Data	
Box Colour:	Brown Cardboard Box
Box Qty:	1
Label Size:	x
Label Colour:	White Label
Label Qty:	1
Outer Box Dimensions (If Applicable)	
Length (mm):	
Width (mm):	
Height (mm):	
Gross Weight (kg):	
Barcode:	5055275862544
Product Details	
Country of Origin:	Poland
Fitting Instruction:	No
Certification:	FSC: N/A CE: N/A
Material Colour Reference:	Not Applicable
Product Material:	Steel
Material Thickness:	
Volume (Ltr):	N/A
Displaced Capacity:	N/A
Leg Set Included:	Not Applicable
Waste Included:	Not Applicable
Drilled/Undrilled:	Not Applicable
Includes Grips:	Not Applicable
Embossed:	Not Applicable
No of Tapholes:	Not Applicable
Anti-Slip:	Not Applicable