Architectural mechanical equipment

Manual and Electronic Window Openers

Electronic controls - C30 control

Electric actuator model C30 with double link articulated chain, in special casing, complete with support and accessories for top and bottom hinged windows. Functions at 230V~ 50Hz, or alternatively, at 24V DC. Maximum load applicable 300N. Rapid fastening to the window. Stroke adjustable from the outside using the selector switch with stops at 20 and 38 cm. Electronic with acoustic warning to signal erroneous installation to the user. On request, available in a version designed for the USA2 synchronization unit, for simultaneous operation of 2 actuators installed on the same window frame. The device is marked with the CE seal and complies with the following directives: CEE 89/336, CEE 73/23 and subsequent amendments.

Key Features

- Double link articulated chain.
- Fitting accessories for top and bottom hung windows.
- Available in 240v or 24v.
- Max. application load 300N.
- Rapid coupling for the adjustment to the frame.
- Stroke adjustment at 20 and 38 cm.
- Acoustic device that warns of incorrect installation.
- USA2 synchronizaton unit available for the simultaneous running of 2 actuators.

Colours:
White and Black

Quick Fit window connector for C20, C30 and C40

contact us for more details:
8.15 - 16.45 (mon-thurs)
8.15 - 13.15 (fri)
Tel: +44 (0)1268 522861
Fax: +44 (0)1268 282994
www.clearlinearchitectural.com

Kongsberg Automotive
Christopher Martin rd.
Basildon
Essex
SS14 3ES
England

ISSUE DATE: March 09

TeleflexMorse reserve the right to modify their products without notice including their specifications, equipment and accessories

Architectural mechanical equipment

Manual and Electronic Window Openers

Electronic controls - C30 control

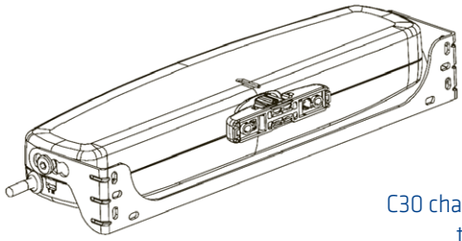

C30 chain actuator with top hung bracket

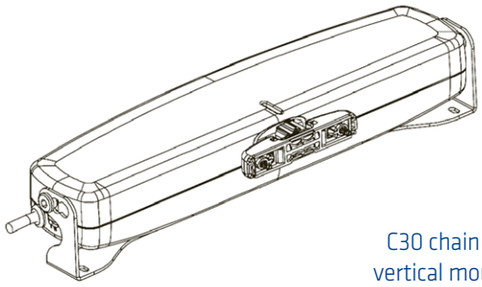

C30 chain actuator with vertical mounting bracket

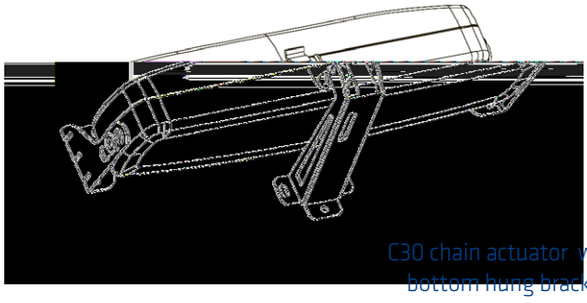

C30 chain actuator with bottom hung brackets

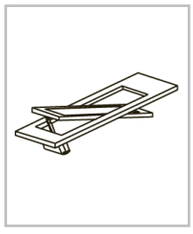

Double link chain with very high resistance on top loads.

Fast hooking and unhooking system to the window (international patent).

Simple swivel bracket for fast installations to windows of any type size.

Telescopic chain terminal with fast adjustment (from 0 to 15mm) also with totally retracted chain, for application on windows with overhung element (international patient).

Swivel bracket with additional adjusting system of 15mm for application on windows with overhung element.

contact us for more details:
8.15 - 16.45 (mon-thurs)
8.15 - 13.15 (fri)
Tel: +44 (0)1268 522861
Fax: +44 (0)1268 282994
www.clearlinearchitectural.com

Kongsberg Automotive
Christopher Martin rd.
Basildon
Essex
SS14 3ES
England

ISSUE DATE: March 09

TeleflexMorse reserve the right to modify their products without notice including their specifications, equipment and accessories

Architectural mechanical equipment

Manual and Electronic Window Openers

Electronic controls - C30 control

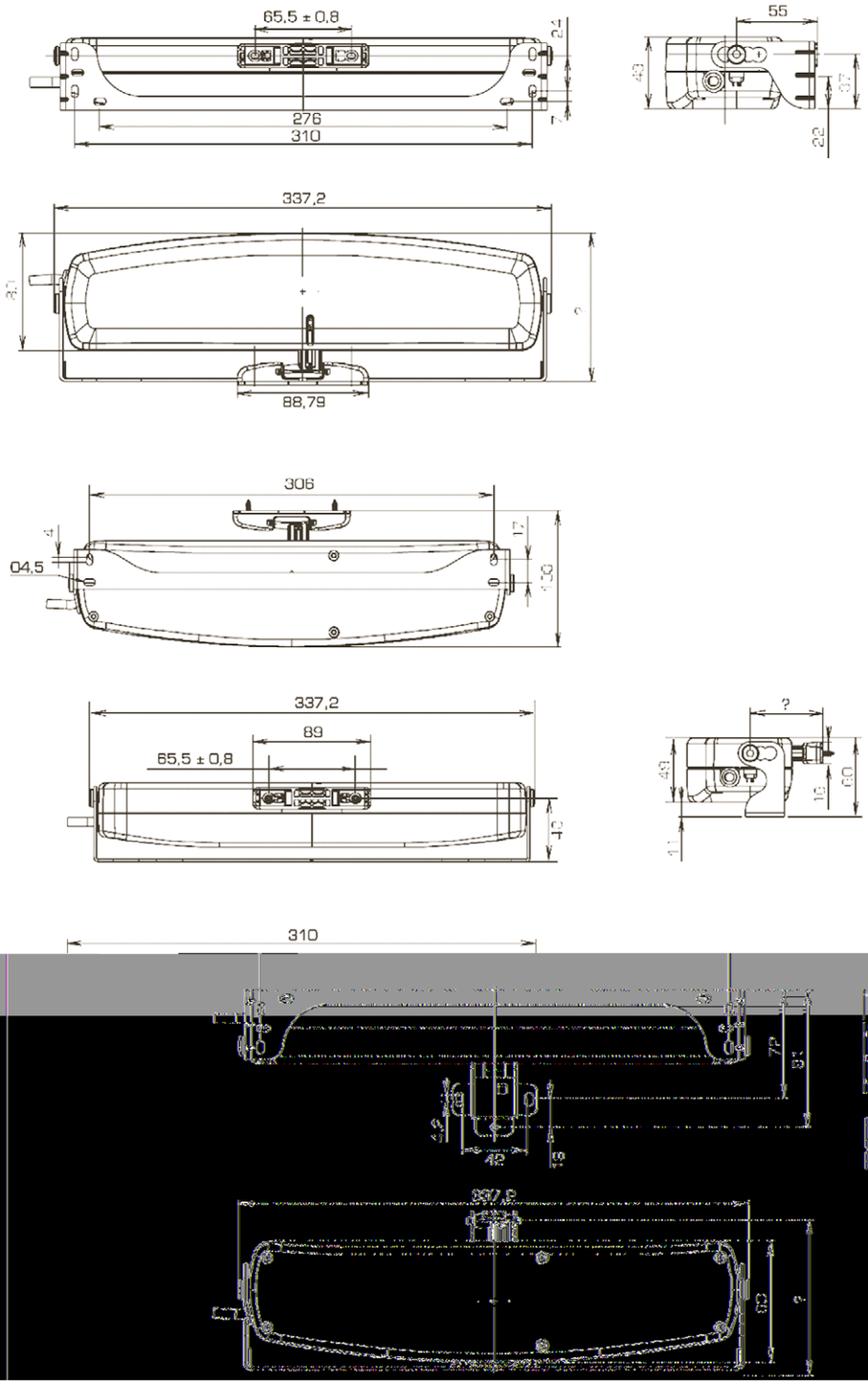

contact us for more details:
8.15 - 16.45 (mon-thurs)
8.15 - 13.15 (fri)
Tel: +44 (0)1268 522861
Fax: +44 (0)1268 282994
www.clearlinearchitectural.com

Kongsberg Automotive
Christopher Martin rd.
Basildon
Essex
SS14 3ES
England

ISSUE DATE: March 09

TeleflexMorse reserve the right to modify their products without notice including their specifications, equipment and accessories

Electronic controls - C30 control

Technical Specification - C30 Control

	C30/230		C30/24
Power supply voltage	230 V ~ 50 Hz		24V d.c.
Maximum applicable load in thrust:		300N	
Maximum applicable load in traction:		300N	
Strokes (may be selected in any moment)		200 and 380 mm	
Absorbed current	0,32 A		1,3 A
Idle translation speed	24 mm/s		17 mm/s
Duration of the idle stroke	16 s		22 s
Double electric insulation	YES		-
Service type		S2 of 3 min	
Operating temperature		-5 +50 °C	
Protection degree of electric devices		IP 30	
Adjustment of the window frame connection		15 mm.	
Pins adjustment for swivel brackets		15 mm.	
Connection in parallel of two or more actuators		yes	
Connection and synchronization of two or three C30* on the same window		Only with control unit USA2 only	
Chain position control		yes	
End of stroke		by encoder	
Electronics with acoustic device to warn the user of wrong installation (buzzer)	1,1 Kg	yes	1,1 Kg
Dimensions		337.2 x 80 x 49mm	
Weight** of installed equipment		1.1 kg	

* minimum distance among the two or three motors: 1500 mm.

** the weight indicated in the table is subject to eventual variations according to the accessories chosen

contact us for more details:
8.15 - 16.45 (mon-thurs)
8.15 - 13.15 (fri)
Tel: +44 (0)1268 522861
Fax: +44 (0)1268 282994
www.clearlinearchitectural.com

Kongsberg Automotive
Christopher Martin rd.
Basildon
Essex
SS14 3ES
England

ISSUE DATE: March 09

TeleflexMorse reserve the right to modify their products without notice including their specifications, equipment and accessories