MATERIAL SPECIFICATIONS

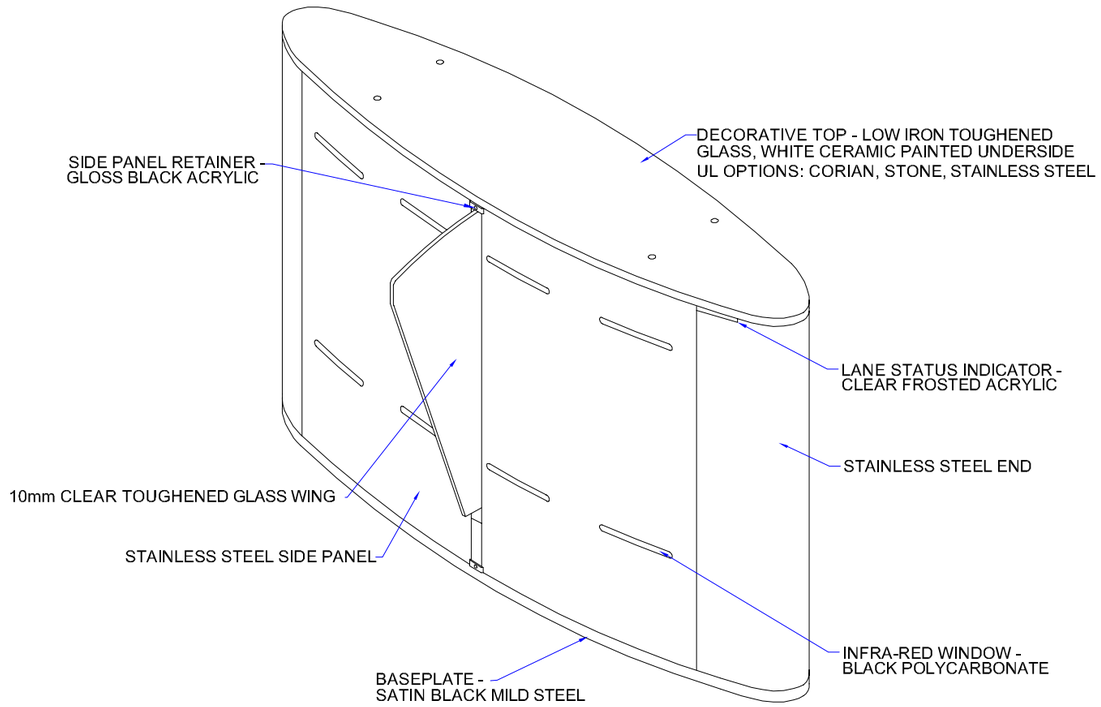

ALL GLASS IS TOUGHENED - EN14179 / ANSI Z97.1

ALL STAINLESS STEEL IS 304 GRADE SATIN FINISH AND 240 GRIT WITH HORIZONTAL GRAIN

LANE LAYOUT & GENERAL DIMENSIONS

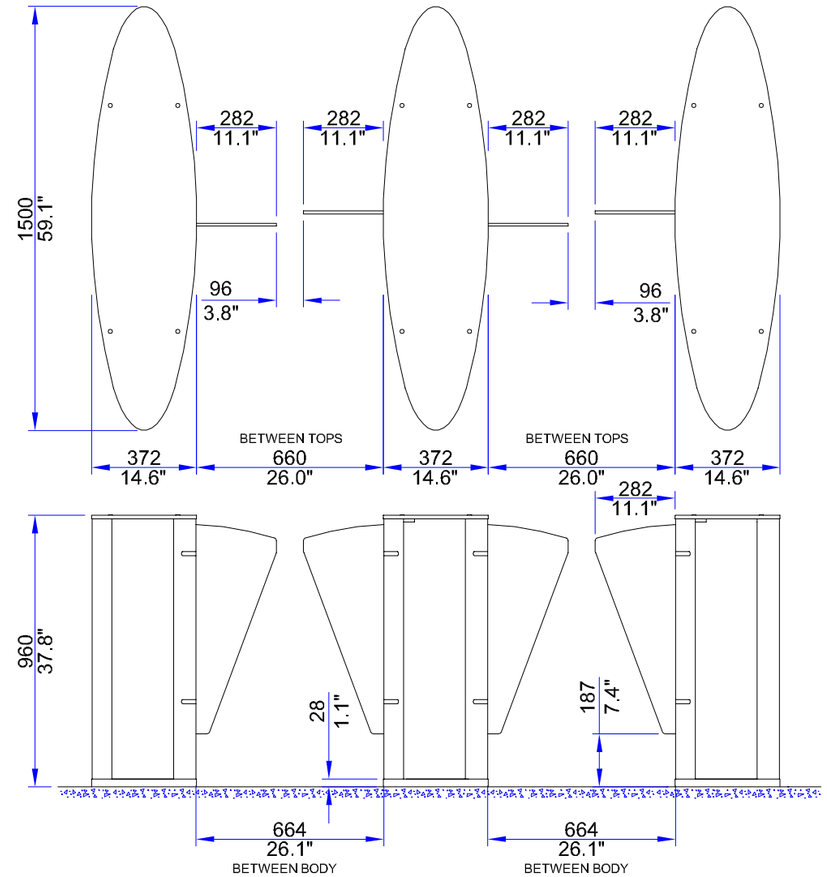

READER MOUNTING OPTIONS

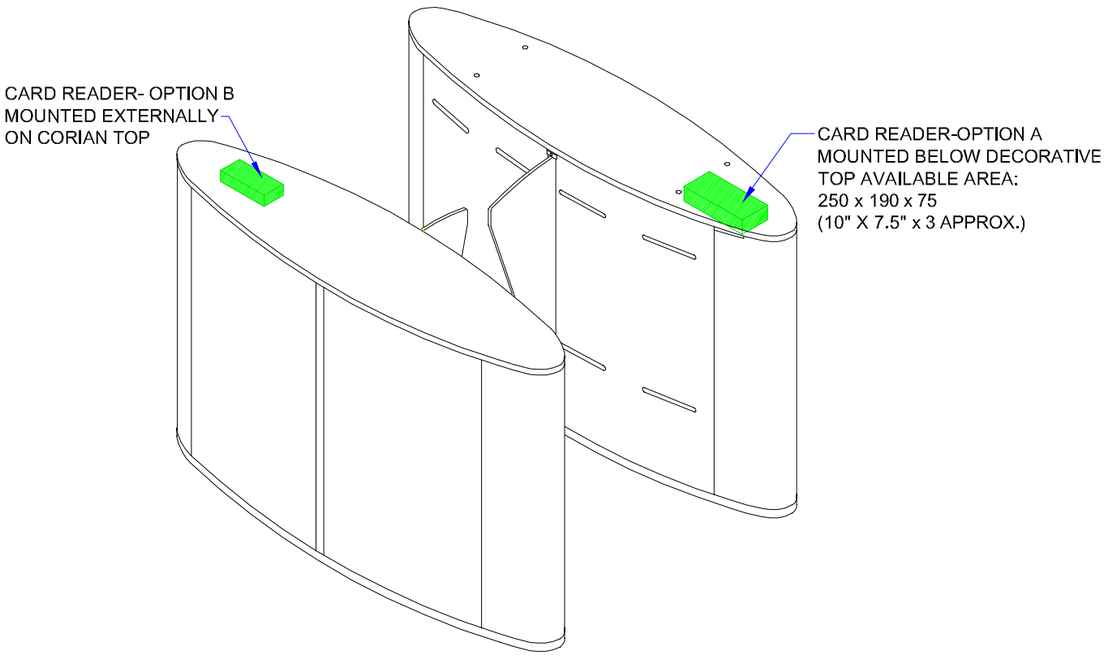

PEDESTAL FOOTPRINT

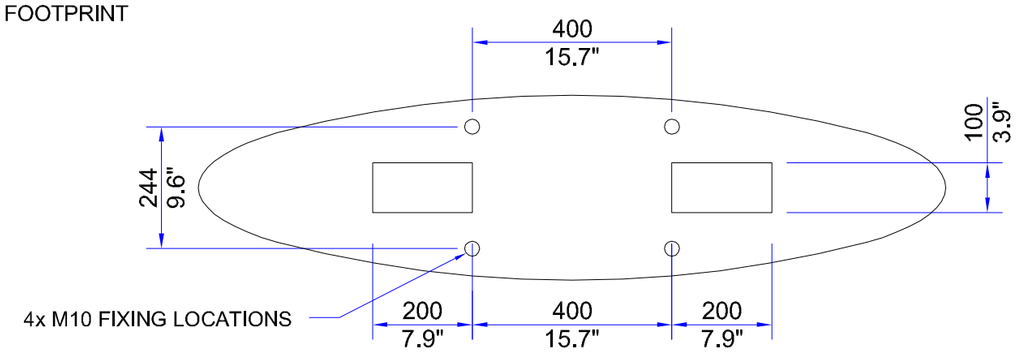

PRODUCT: GLASSWING STANDARD

TITLE: GENERAL INFORMATION

DRAWING No: GWSTD_A2

FOR SALES INFORMATION ONLY-SUBJECT TO CHANGE

ALL DIMENSIONS +/-2mm

This document is the copyright of Integrated Design LTD

F

fastlane