eibe
complete inspiration

5 55 657 0

Organiq climbing unit Centipede

made in germany

Scope of delivery

1x climbing unit Grasshopper: Powder steel, polypropylen, HDPE, polyethylen
1x slide: LDPE

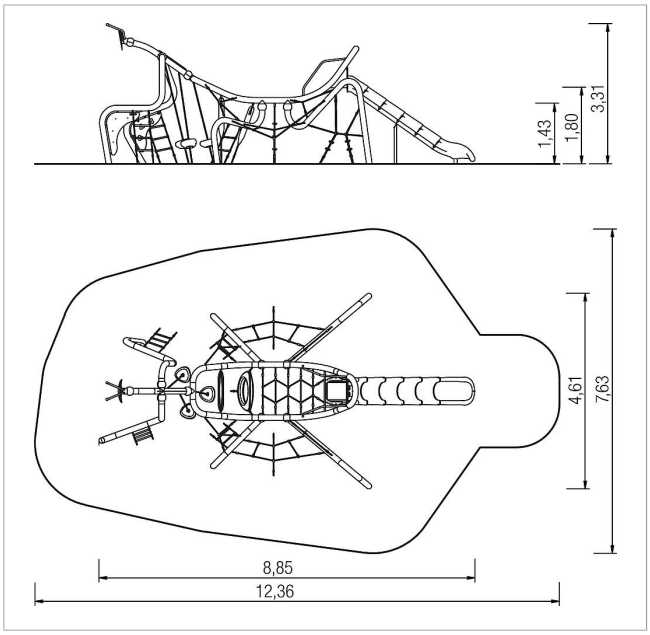

Material	Powder steel, PP, PE, HDPE
Foundation level	FL 3
Minimum space	12,36x7,63x5,11 m
Free falling height	219 cm
Impact protection net	69,0 m^2
Foundations	17x CF

eibeplay Ltd, eibe House | Forsyth's Home Farm | A3 Bypass Road, Hurtmore, Surrey | GU8 6 AD | UK | Fon +44 (0)14 83/813 834 | Fax +44 (0)14 83/813 851 | eibe@eibe.co.uk | www.eibe.co.uk