Drilling template

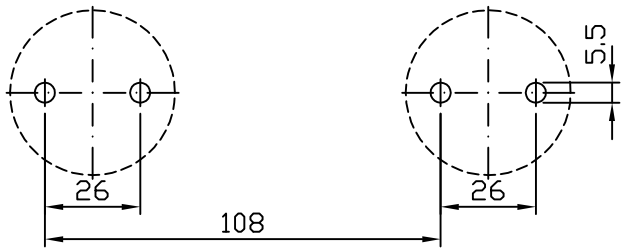

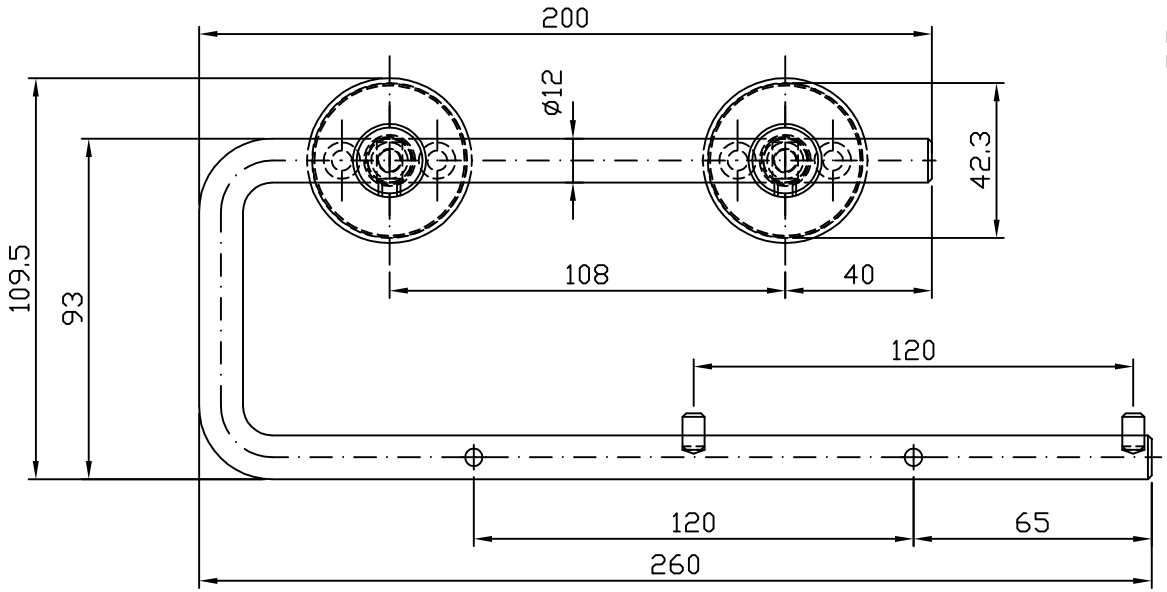

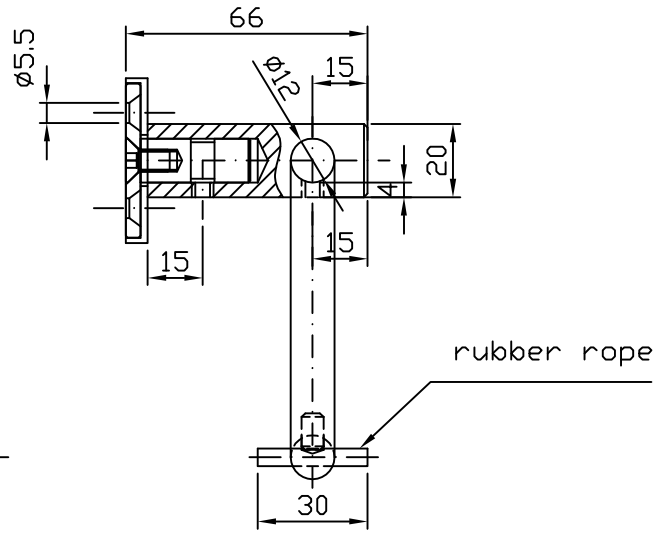

AC 252