WATER PRESSURE GOVERNOR TYPE WG4

DESCRIPTION

The Dereve Water Pressure Governor type WG4 has been developed for use on water appliances with capacities of up to 23 LPM (5 GPM).

The continuously variable setting of the outlet pressure is obtained by an adjusting screw. (which can be locked In position). The outlet pressure is increased by turning the screw clockwise.

The body is manufactured from brass and, together with other exposed brass components, is chromium plated to increase corrosion resistance.

The diaphragm, 'O' ring and valve pad are made from synthetic rubber.

A selection of springs is available to extend the outlet pressure range of the Governor.

Inlet and Outlet connections are 1/2" BSP parallel, female x female.

(formed to accept 15 mm compression fittings,
brass nuts and copper olives can be supplied on request).

OPERATION

The pressure above the diaphragm is atmospheric and is maintained by a breather hole in the cap (1).
The diaphragm (3) is loaded by means of a spring (2) and is fixed to spindle (4) which has a resilient valve washer (5) positioned to operate against the single valve seat. The top of the spindle is fitted with an 'O' ring and as the top of the spindle area is equal to the valve seat area a balance of forces is produced.

The outlet pressure acting over the effective area of the diaphragm opposes the spring force to produce equilibrium. Changes of flow and inlet pressure are compensated for by the control so that near constant outlet pressure is maintained.

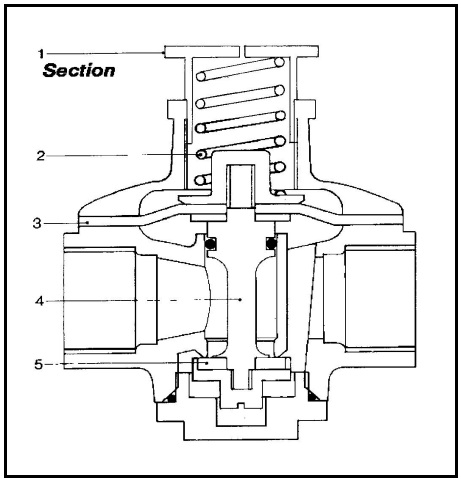

BONUT ENGINEERING LTD

Unit 12, Latham Close • Bredbury Industrial Park • STOCKPORT SK6 2SD
Tel: +44 (0) 161 430 4000 Fax: +44 (0) 161 494 1461
Email: info@bonutengineering.co.uk website: www.bonutengineering.co.uk

WATER PRESSURE GOVERNOR TYPE WG4

Performance

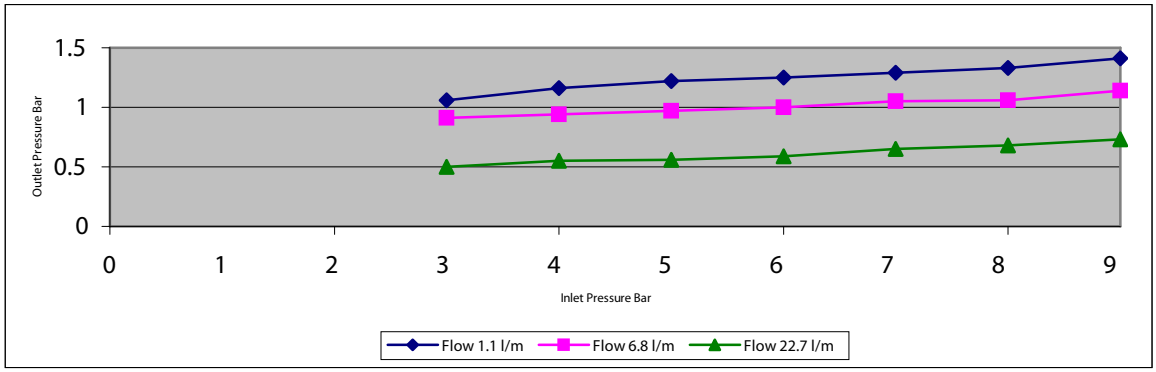

Technical data

Type	WG4
Connection Range	1/2" BSP
Flow Range Water - L/min (gal/min)	1.13-22.7 (0.25-5.0)
Max. Inlet Pressure - barg (psig)	10.35 (150)
Max. Outlet Pressure Range - barg (psig)	0.14-6.90 (2-100)
Maximum ambient temperature - deg C (deg F)	80°C (176°F)
Weight - gms (lb)	595 (1.3)

Selection table

	Product no.	Outlet Pressure Range
WG4	07052/04	0.69 - 2.07 barg (10-30 psig)
WG4	07052/03	2.07 - 4.83 barg (30-70 psig)

Installation

The Dereve Water Pressure Governor can be mounted in any position and the direction of flow is marked with an arrow.
All pipes must be free of burrs and should be clean before being connected.
The housing of the control must not be used as a lever and undue force must not be applied to assembly connections.
If compression fittings have been supplied with the control, screw in the nut finger tight plus one turn.

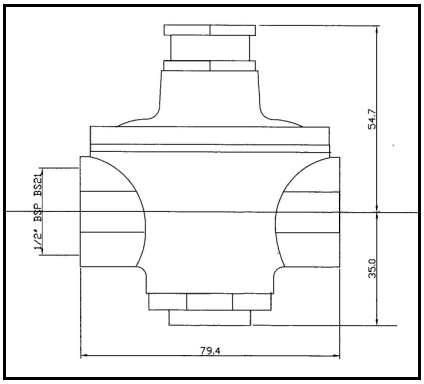

BONUT ENGINEERING LTD
Unit 12, Latham Close • Bredbury Industrial Park • STOCKPORT SK6 2SD
Tel: +44 (0) 161 430 4000 Fax: +44 (0) 161 494 1461
Email: info@bonutengineering.co.uk website: www.bonutengineering.co.uk