HOW TO SURVEY

We require a plan view of what the coping is going to cover i.e. the wall. Lengths of each wall (dimensions to be shown in millimetres). Wall thickness's, it is recommended wall widths are taken every metre.

We require marked up areas where there are wall abutments & closed ends, corners are assumed 90 degrees unless otherwise stated. (See diagram)
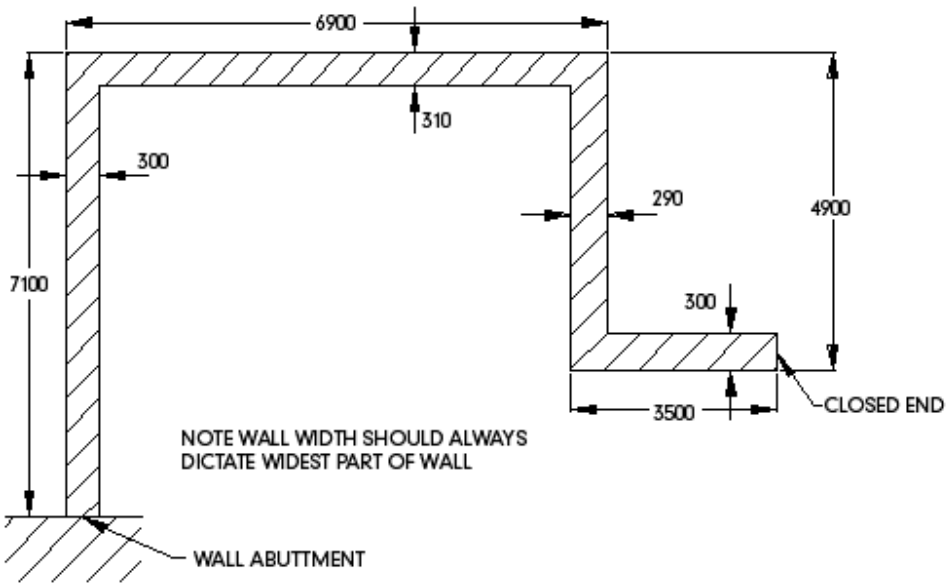
Refer to drawing below for reference.