R4

HINGE FOR WOODEN ENTRANCE DOORS

MADE OF ITALY

High capacity

Adjustable friction

Wide adjustments

Easy to be installed

Minimal design

AGB

HARDWARE SYSTEMS FOR WINDOWS AND DOORS

160 KG CAPACITY, SASH OPENING ALWAYS PRECISE

R4 is the solution for the modern architecture requests: up to 160 kg capacity with three hinges. The sash movement is always precise and fluid, thanks to the stability offered by R4.

PURE ITALIAN DESIGN

The fastening screws and the adjustment grubs are hidden by the covers.
The cover edge is present on sash and frame parts to hide the working defects.

SUITABLE RANGE FOR THE MOST COMMON AVAILABLE PROFILES

R4
Mod. 10

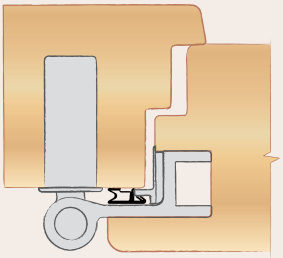

For profiles with gasket on rebate, 10/12 mm

Compatible with:

- gap 4/12 mm
- rebate 18/20 mm
- axis 9/13 mm

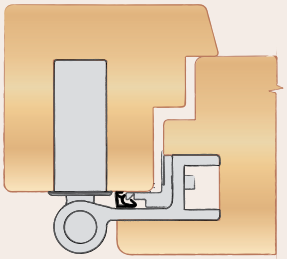

For profiles with reduced gasket

Compatible with:

- gap 4/12 mm
- rebate 15/18/20 mm
- axis 9/13 mm

RAPID INSTALLATION
R4 allows a high rapid installation of the hinges bodies and the workings fulfillment, both using the CNC machines and the jig.

WIDE ADJUSTMENTS
R4 reduces the problems during installation thanks to the extra-large adjustments! The hinge is easily adjustable keeping the door closed.

- Lateral adjustment: ±3 mm
- Permanent block of the lateral adjustment
- Pressure adjustment: 0÷6 mm
- Vertical adjustment: +3 mm, -2 mm

ANTI-BURGLAR GRUBS
The two anti-burglar grubs avoid the extraction of the installed hinge pins, in hinges installations with external mountings.

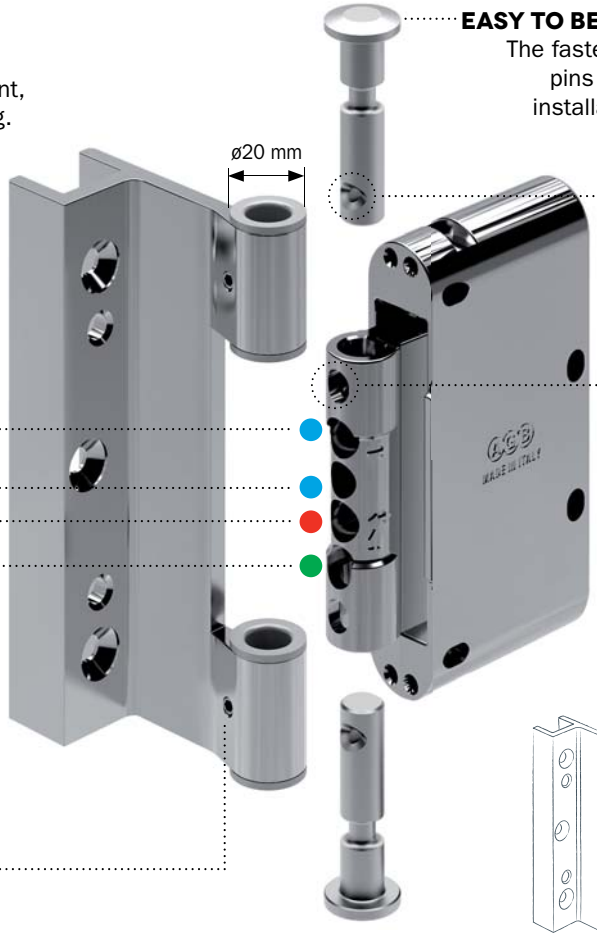

EASY TO BE INSTALLED
The fastening with two pins simplifies the installation of heavy sashes.

ADJUSTABLE FRICTION
Thanks to the adjustable friction, the sash movement could be controlled step by step with the maximum security.

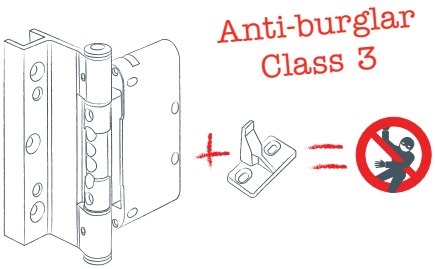

R4
Mod. 18

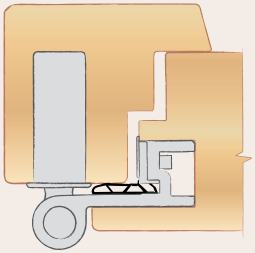

For profiles with gasket on rebate, 15/18 mm

Compatible with:

- gap 4/12 mm
- rebate 15/18 mm
- axis 9/13 mm

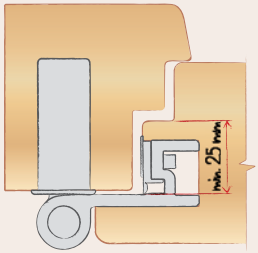

For profiles without gasket on rebate

Compatible with:

- gap 4/12 mm
- rebate 15/18 mm
- axis 9 (25 mm min.), 13 mm

Alban Giacomo spa

Headquarters:
Via A. De Gasperi, 75
36060 Romano d'Ezzelino (VI) - Italy

Warehouse:
Via Col Beretta, 4
36022 Cassola (VI) - Italy

Cylinders plant:
Via S. Bortolo, 44
36020 Pove del Grappa (VI) - Italy

Tel. +39 0424 832 832
www.agb.it - info@agb.it

MADE OF ITALY

Z90155.02.22 - 04.15 - Communications Dept. - Printed in Italy

The supplied data and pictures are to be considered valid saving any printing error or modifications introduced by the manufacturer.